Ⓐ 165 LB/SY - RECYCLED ASPH CONC 12.5 MM SUPERPAVE, GP 2 ONLY, INCL POLYMER-MODIFIED BITUM MATL & H LIME
Ⓑ 220 LB/SY - RECYCLED ASPH CONC 19 MM SUPERPAVE, GP 1 OR 2, INCL BITUM MATL & H LIME
Ⓒ 660 LB/SY - RECYCLED ASPH CONC 25 MM SUPERPAVE, GP 1 OR 2, INCL BITUM MATL & H LIME
Ⓓ 10" GRADED AGGREGATE BASE COURSE
Ⓔ 4" CONCRETE SIDEWALK/MULTI-USE PATH (8" CONCRETE AT INTERSECTIONS)
Ⓕ CONCRETE CURB AND GUTTER (8"x30"), TYPE 2, GA STD. 9032B
Ⓖ CONCRETE CURB AND GUTTER (8"x30"), TYPE 7, GA STD. 9032B
Ⓗ CONCRETE CURB AND GUTTER (8"x24"), TYPE 2, GA STD. 9032B
Ⓘ CONCRETE CURB AND GUTTER (8"x24"), TYPE 7, GA STD. 9032B
Ⓙ RECYCLED ASPH CONC LEVELING, INCL BITUM MATL & H LIME
Ⓚ MILL ASPH CONC PVMT, VARIABLE DEPTH
Ⓛ 4" RAISED CONCRETE MEDIAN
Ⓜ SAW CUT EXISTING PAVEMENT

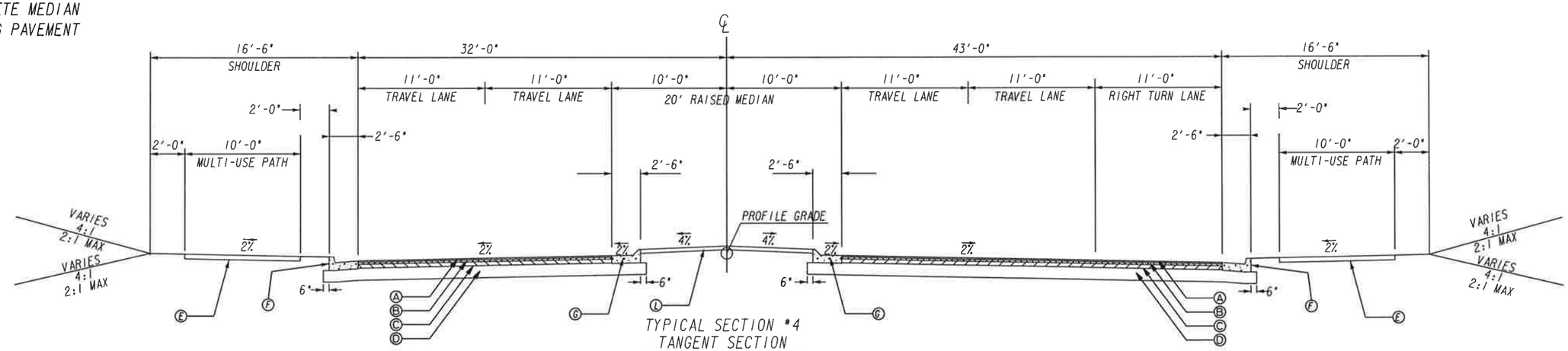

TYPICAL SECTION #4
TANGENT SECTION
McGINNIS FERRY ROAD
STA 117+03 TO STA 118+84

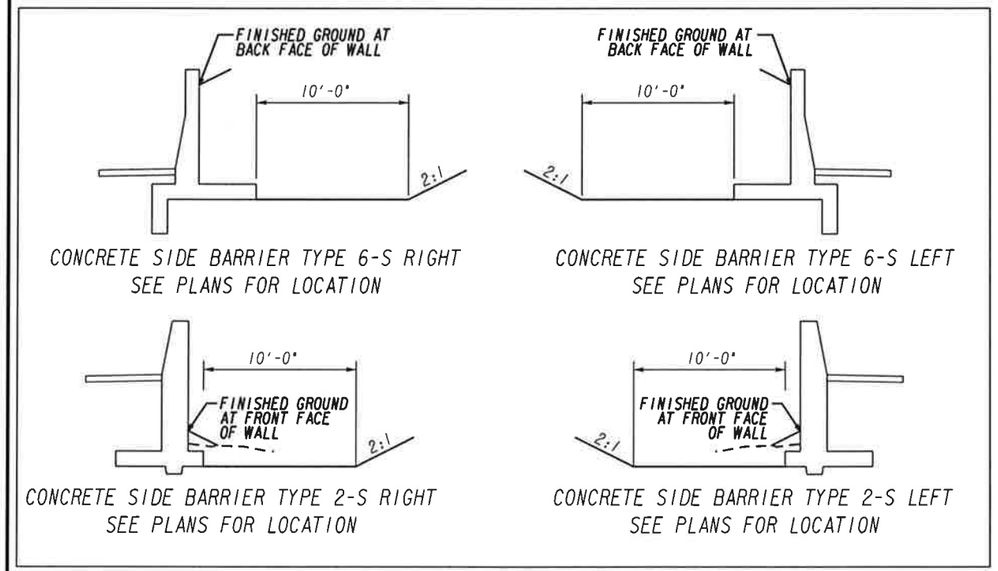

CONCRETE SIDE BARRIER TYPE 6-S RIGHT
SEE PLANS FOR LOCATION

CONCRETE SIDE BARRIER TYPE 6-S LEFT
SEE PLANS FOR LOCATION

CONCRETE SIDE BARRIER TYPE 2-S RIGHT
SEE PLANS FOR LOCATION

CONCRETE SIDE BARRIER TYPE 2-S LEFT
SEE PLANS FOR LOCATION

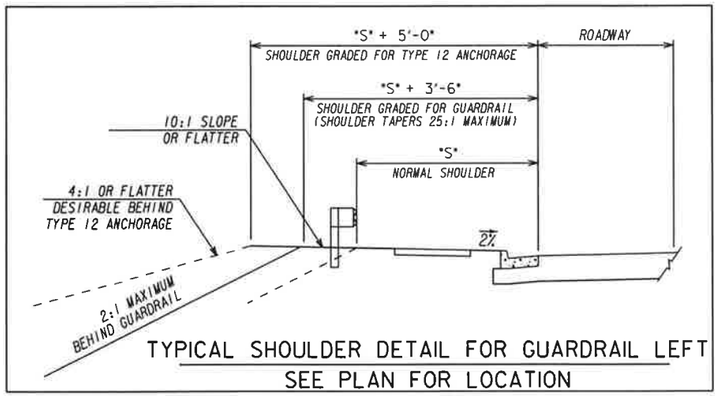

TYPICAL SHOULDER DETAIL FOR GUARDRAIL LEFT
SEE PLAN FOR LOCATION

SCALE IN FEET
0 5 10 20

REVISION DATES

TYPICAL SECTIONS
MCGINNIS FERRY RD

CHECKED:		DATE:	DRAWING No.
BACKCHECKED:		DATE:	05-0003
CORRECTED:		DATE:	
VERIFIED:		DATE:	

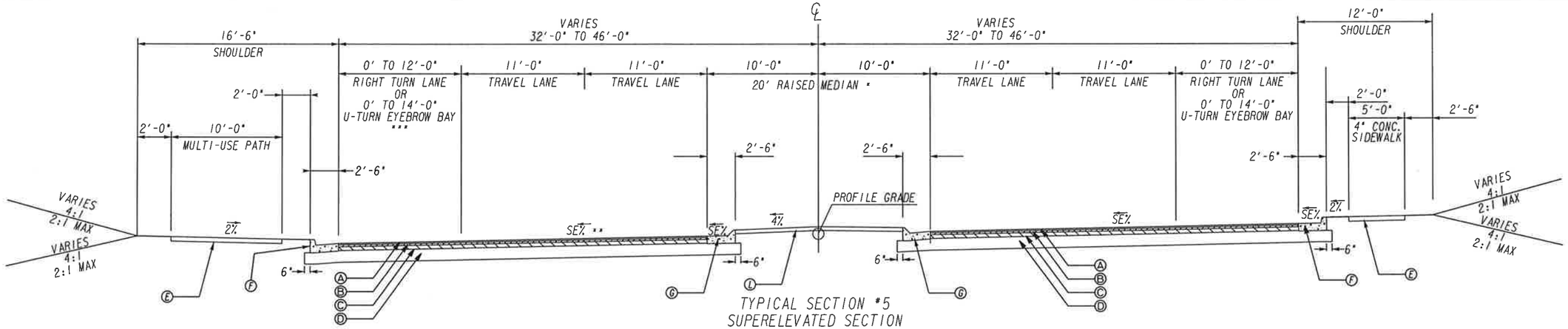

TYPICAL SECTION #5
SUPERELEVATED SECTION
McGINNIS FERRY ROAD
STA 118+84 TO STA 131+54
STA 137+28 TO STA 146+37
STA 147+14 TO STA 160+65
STA 160+83 TO STA 171+86
STA 174+70 TO STA 191+68

NOTE * 20' RAISED MEDIAN SECTION MAY ALSO TRANSITION TO 12' LEFT TURN LANE (LEFT OR RIGHT) PLUS 8' RAISED MEDIAN SECTION SEE SINGLE LEFT TURN LANE TRANSITIONION DETAIL & PLAN AND CROSS SECTION SHEET FOR DETAILS

** SEE ROADWAY PLANS FOR SUPERELEVATION RATES AND TRANSITIONIONS.

*** FOR U-TURN EYEBROW BAY, SEE ROADWAY PLAN AND GDOT DETAIL M-3A.

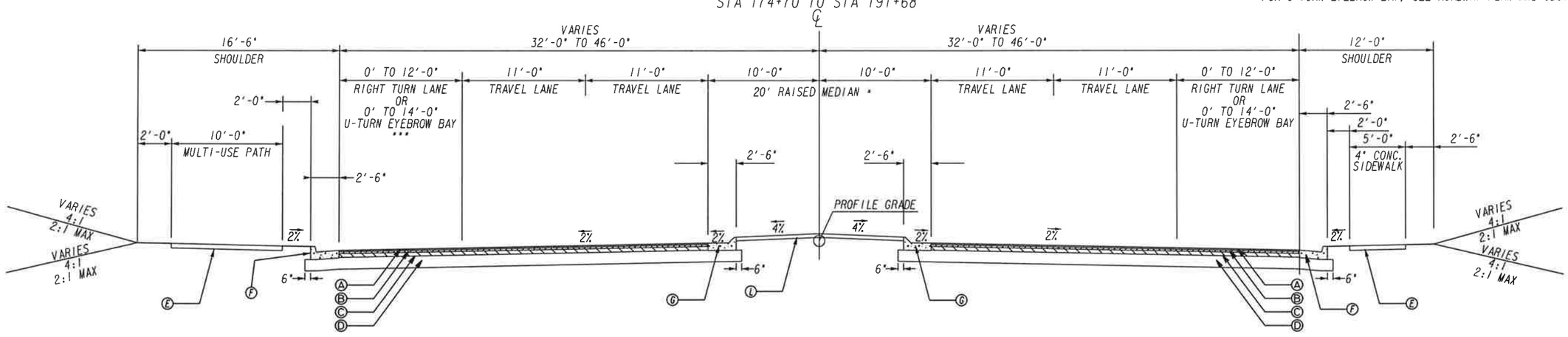

Ⓐ 165 LB/SY - RECYCLED ASPH CONC 12.5 MM SUPERPAVE, GP 2 ONLY, INCL POLYMER-MODIFIED BITUM MATL & H LIME
Ⓑ 220 LB/SY - RECYCLED ASPH CONC 19 MM SUPERPAVE, GP 1 OR 2, INCL BITUM MATL & H LIME
Ⓒ 660 LB/SY - RECYCLED ASPH CONC 25 MM SUPERPAVE, GP 1 OR 2, INCL BITUM MATL & H LIME
Ⓓ 10" GRADED AGGREGATE BASE COURSE
Ⓔ 4" CONCRETE SIDEWALK/MULTI-USE PATH (8" CONCRETE AT INTERSECTIONS)
Ⓕ CONCRETE CURB AND GUTTER (8"x30"), TYPE 2, GA STD. 9032B
Ⓖ CONCRETE CURB AND GUTTER (8"x30"), TYPE 7, GA STD. 9032B
Ⓗ CONCRETE CURB AND GUTTER (8"x24"), TYPE 2, GA STD. 9032B
Ⓘ CONCRETE CURB AND GUTTER (8"x24"), TYPE 7, GA STD. 9032B
Ⓙ RECYCLED ASPH CONC LEVELING, INCL BITUM MATL & H LIME
Ⓚ MILL ASPH CONC PVMT, VARIABLE DEPTH
Ⓛ 4" RAISED CONCRETE MEDIAN
Ⓜ SAW CUT EXISTING PAVEMENT

TYPICAL SECTION #6
TAGENT SECTION
McGINNIS FERRY ROAD
STA 131+54 TO STA 132+11
STA 132+11 TO STA 134+02 (BRIDGE SECTION)
STA 134+02 TO STA 137+28
STA 146+37 TO STA 147+14
STA 160+65 TO STA 160+83
STA 171+86 TO STA 174+70
STA 191+68 TO STA 198+00

SCALE IN FEET
0 5 10 20

REVISION DATES

TYPICAL SECTIONS
MCGINNIS FERRY RD

CHECKED: DATE:
BACKCHECKED: DATE:
CORRECTED: DATE:
VERIFIED: DATE:

DRAWING NO.
05-0004

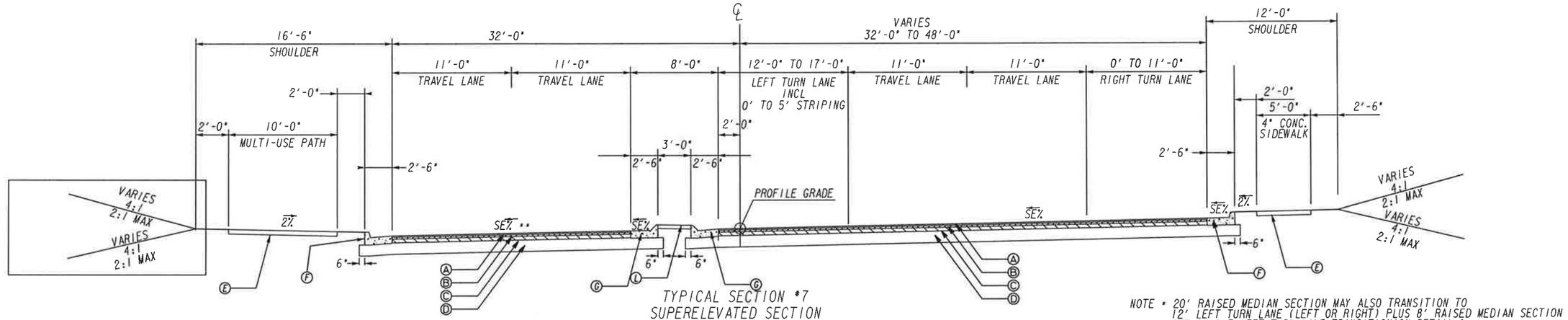

TYPICAL SECTION #7
SUPERELEVATED SECTION
McGINNIS FERRY ROAD
STA 198+00 TO STA 201+61

NOTE * 20' RAISED MEDIAN SECTION MAY ALSO TRANSITION TO 12' LEFT TURN LANE (LEFT OR RIGHT) PLUS 8' RAISED MEDIAN SECTION SEE SINGLE LEFT TURN LANE TRANSITIONION DETAIL & PLAN AND CROSS SECTION SHEET FOR DETAILS

** SEE ROADWAY PLANS FOR SUPERELEVATION RATES AND TRANSITIONIONS.

*** FOR U-TURN EYEBROW BAY, SEE ROADWAY PLAN AND GDOT DETAIL M-3A.

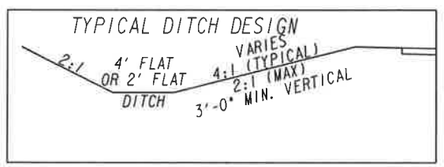

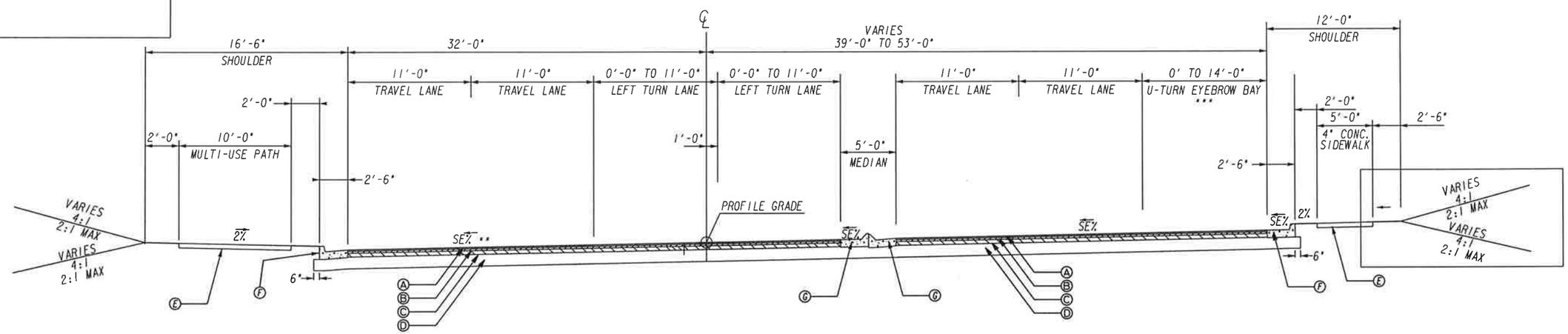

TYPICAL SECTION #8
SUPERELEVATED SECTION
McGINNIS FERRY ROAD
STA 201+61 TO STA 205+52

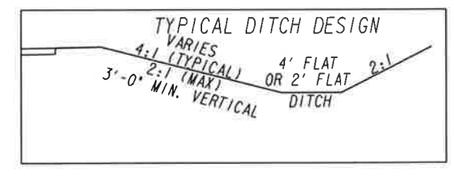

Ⓐ 165 LB/SY - RECYCLED ASPH CONC 12.5 MM SUPERPAVE, GP 2 ONLY, INCL POLYMER-MODIFIED BITUM MATL & H LIME
Ⓑ 220 LB/SY - RECYCLED ASPH CONC 19 MM SUPERPAVE, GP 1 OR 2, INCL BITUM MATL & H LIME
Ⓒ 660 LB/SY - RECYCLED ASPH CONC 25 MM SUPERPAVE, GP 1 OR 2, INCL BITUM MATL & H LIME
Ⓓ 10" GRADED AGGREGATE BASE COURSE
Ⓔ 4" CONCRETE SIDEWALK/MULTI-USE PATH (8" CONCRETE AT INTERSECTIONS)
Ⓕ CONCRETE CURB AND GUTTER (8"x30"), TYPE 2, GA STD. 9032B
Ⓖ CONCRETE CURB AND GUTTER (8"x30"), TYPE 7, GA STD. 9032B
Ⓗ CONCRETE CURB AND GUTTER (8"x24"), TYPE 2, GA STD. 9032B
Ⓘ CONCRETE CURB AND GUTTER (8"x24"), TYPE 7, GA STD. 9032B
Ⓙ RECYCLED ASPH CONC LEVELING, INCL BITUM MATL & H LIME
Ⓚ MILL ASPH CONC PVMT, VARIABLE DEPTH
Ⓛ 4" RAISED CONCRETE MEDIAN
Ⓜ SAW CUT EXISTING PAVEMENT

SCALE IN FEET
0 5 10 20

REVISION DATES

TYPICAL SECTIONS
MCGINNIS FERRY RD

CHECKED: DATE:
BACKCHECKED: DATE:
CORRECTED: DATE:
VERIFIED: DATE:

DRAWING No.
05-0005

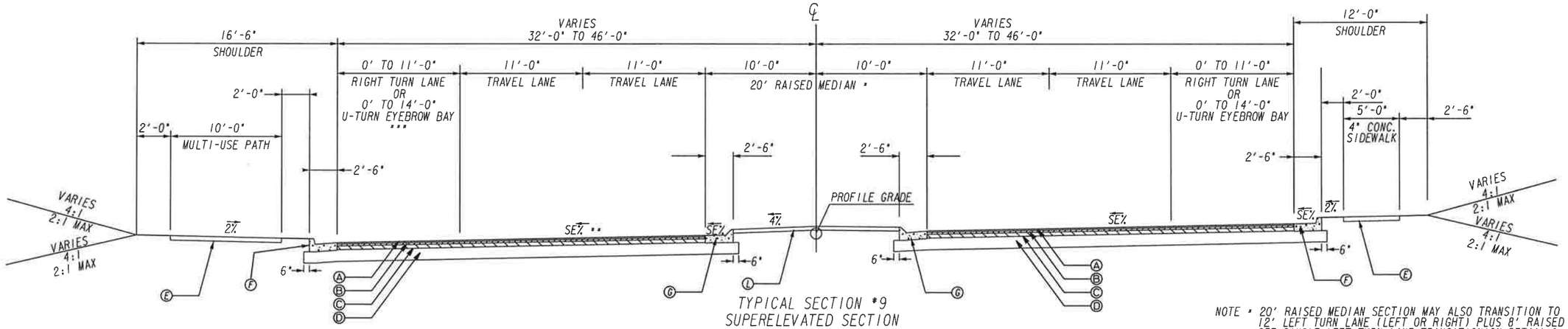

TYPICAL SECTION *9
SUPERELEVATED SECTION
McGINNIS FERRY ROAD
STA 205+52 TO STA 224+83
STA 225+98 TO STA 231+36
STA 231+60 TO STA 241+98
STA 256+72 TO STA 262+01
STA 263+09 TO STA 269+00
STA 303+35 TO STA 304+76
STA 324+50 TO STA 326+02

NOTE * 20' RAISED MEDIAN SECTION MAY ALSO TRANSITION TO 12' LEFT TURN LANE (LEFT OR RIGHT) PLUS 8' RAISED MEDIAN SECTION SEE SINGLE LEFT TURN LANE TRANSITIONION DETAIL & PLAN AND CROSS SECTION SHEET FOR DETAILS

** SEE ROADWAY PLANS FOR SUPERELEVATION RATES AND TRANSITIONIONS.

*** FOR U-TURN EYEBROW BAY, SEE ROADWAY PLAN AND GDOT DETAIL M-3A.

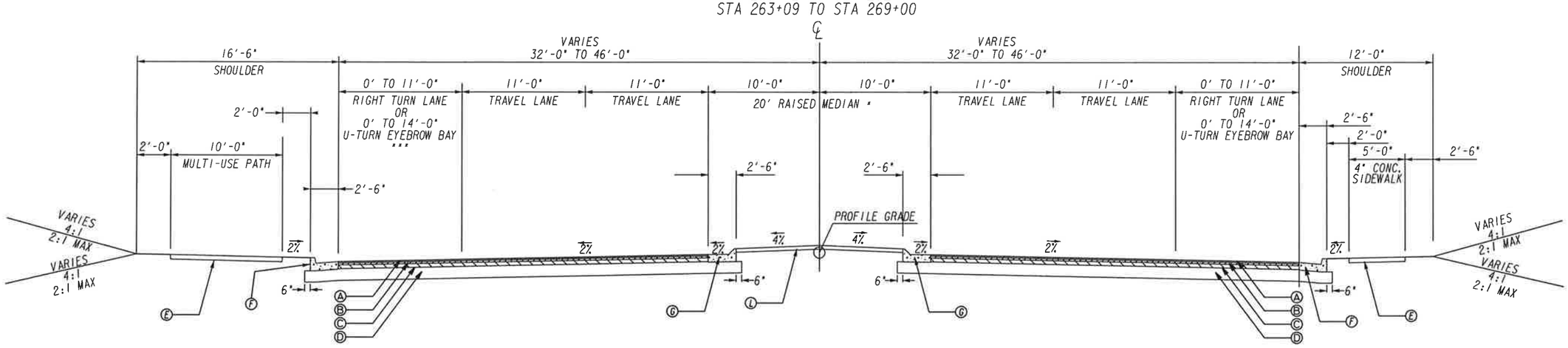

Ⓐ 165 LB/SY - RECYCLED ASPH CONC 12.5 MM SUPERPAVE, GP 2 ONLY, INCL POLYMER-MODIFIED BITUM MATL & H LIME
Ⓑ 220 LB/SY - RECYCLED ASPH CONC 19 MM SUPERPAVE, GP 1 OR 2, INCL BITUM MATL & H LIME
Ⓒ 660 LB/SY - RECYCLED ASPH CONC 25 MM SUPERPAVE, GP 1 OR 2, INCL BITUM MATL & H LIME
Ⓓ 10" GRADED AGGREGATE BASE COURSE
Ⓔ 4" CONCRETE SIDEWALK/MULTI-USE PATH (8" CONCRETE AT INTERSECTIONS)
Ⓕ CONCRETE CURB AND GUTTER (8"x30"), TYPE 2, GA STD. 9032B
Ⓖ CONCRETE CURB AND GUTTER (8"x30"), TYPE 7, GA STD. 9032B
Ⓗ CONCRETE CURB AND GUTTER (8"x24"), TYPE 2, GA STD. 9032B
Ⓘ CONCRETE CURB AND GUTTER (8"x24"), TYPE 7, GA STD. 9032B
Ⓙ RECYCLED ASPH CONC LEVELING, INCL BITUM MATL & H LIME
Ⓚ MILL ASPH CONC PVMT, VARIABLE DEPTH
Ⓛ 4" RAISED CONCRETE MEDIAN
Ⓜ SAW CUT EXISTING PAVEMENT

TYPICAL SECTION *10
TAGENT SECTION
McGINNIS FERRY ROAD
STA 224+83 TO STA 225+98
STA 231+36 TO STA 231+60
STA 241+98 TO STA 256+72
STA 262+01 TO STA 263+09
STA 304+76 TO STA 306+72
STA 323+65 TO STA 324+50

SCALE IN FEET
0 5 10 20

REVISION DATES

TYPICAL SECTIONS
MCGINNIS FERRY RD

CHECKED: DATE:
BACKCHECKED: DATE:
CORRECTED: DATE:
VERIFIED: DATE:

DRAWING NO.
05-0006

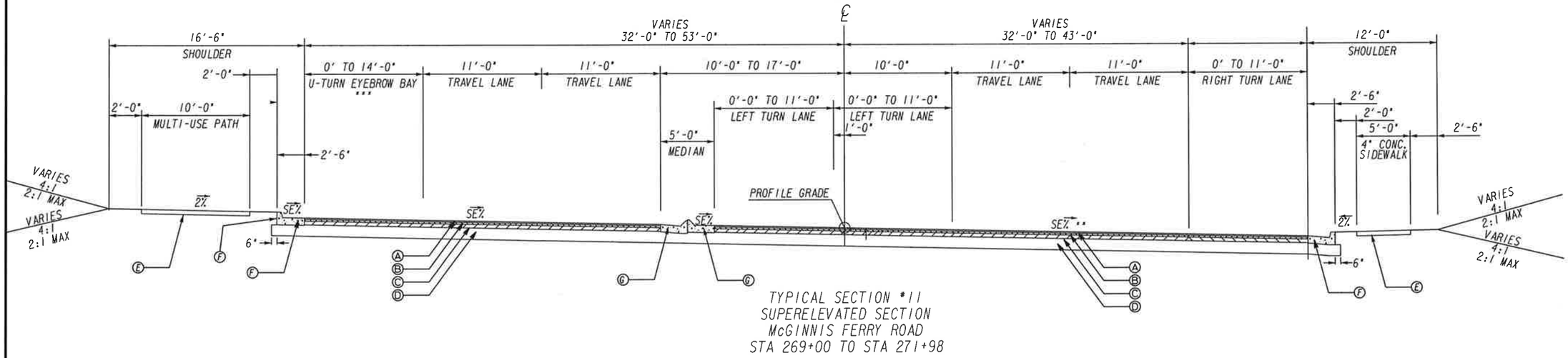

TYPICAL SECTION #11
SUPERELEVATED SECTION
McGINNIS FERRY ROAD
STA 269+00 TO STA 271+98

NOTE
** SEE ROADWAY PLANS FOR SUPERELEVATION RATES AND TRANSITIONIONS.
*** FOR U-TURN EYEBROW BAY, SEE ROADWAY PLAN AND GDOT DETAIL M-3A.

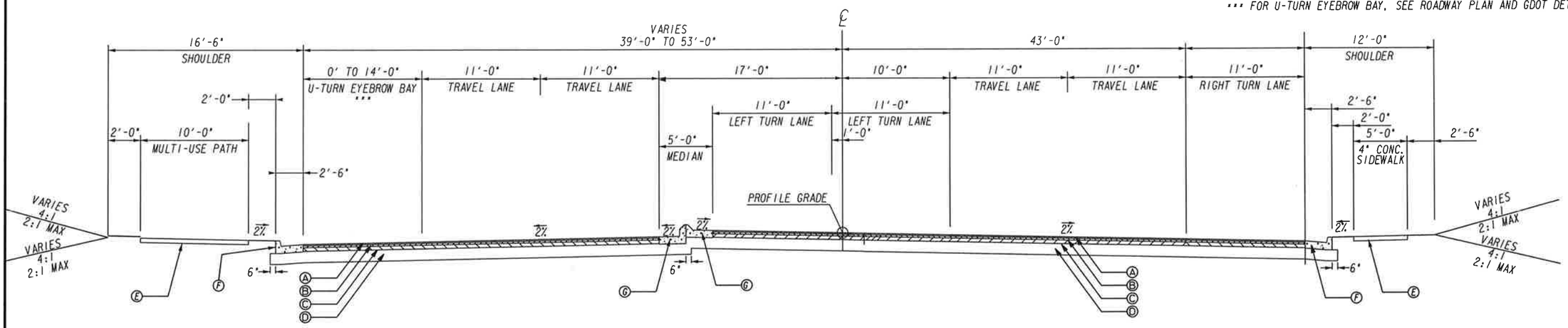

Ⓐ 165 LB/SY - RECYCLED ASPH CONC 12.5 MM SUPERPAVE, GP 2 ONLY, INCL POLYMER-MODIFIED BITUM MATL & H LIME
Ⓑ 220 LB/SY - RECYCLED ASPH CONC 19 MM SUPERPAVE, GP 1 OR 2, INCL BITUM MATL & H LIME
Ⓒ 660 LB/SY - RECYCLED ASPH CONC 25 MM SUPERPAVE, GP 1 OR 2, INCL BITUM MATL & H LIME
Ⓓ 10" GRADED AGGREGATE BASE COURSE
Ⓔ 4" CONCRETE SIDEWALK/MULTI-USE PATH (8" CONCRETE AT INTERSECTIONS)
Ⓕ CONCRETE CURB AND GUTTER (8"x30"), TYPE 2, GA STD. 9032B
Ⓖ CONCRETE CURB AND GUTTER (8"x30"), TYPE 7, GA STD. 9032B
Ⓗ CONCRETE CURB AND GUTTER (8"x24"), TYPE 2, GA STD. 9032B
Ⓘ CONCRETE CURB AND GUTTER (8"x24"), TYPE 7, GA STD. 9032B
Ⓙ RECYCLED ASPH CONC LEVELING, INCL BITUM MATL & H LIME
Ⓚ MILL ASPH CONC PVMT, VARIABLE DEPTH
Ⓛ 4" RAISED CONCRETE MEDIAN
Ⓜ SAW CUT EXISTING PAVEMENT

TYPICAL SECTION #12
TANGENT SECTION
McGINNIS FERRY ROAD
STA 271+98 TO STA 273+72

SCALE IN FEET
0 5 10 20

REVISION DATES

TYPICAL SECTIONS
MCGINNIS FERRY RD

CHECKED: DATE:
BACKCHECKED: DATE:
CORRECTED: DATE:
VERIFIED: DATE:

DRAWING No.
05-0007

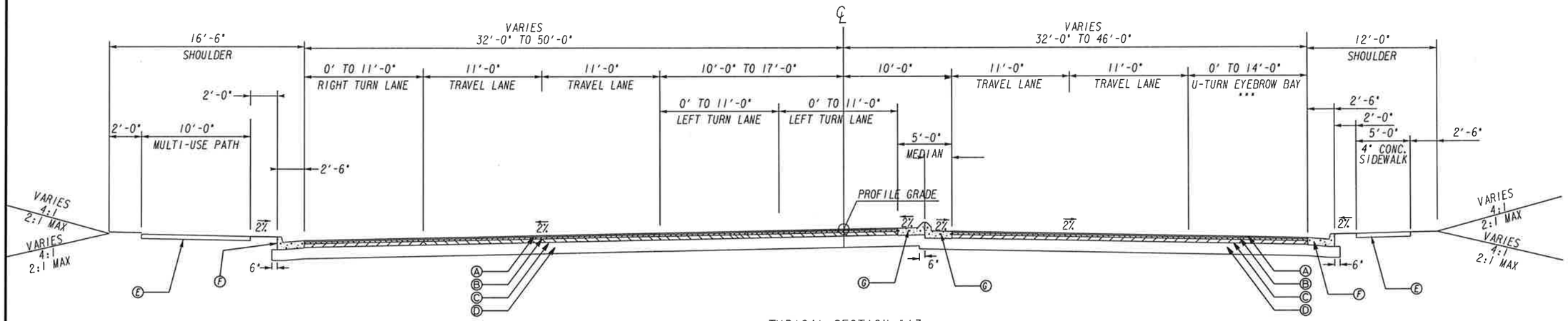

TYPICAL SECTION #13
TANGENT SECTION
McGINNIS FERRY ROAD
STA 273+72 TO STA 278+37 ****

NOTE
*** FOR U-TURN EYEBROW BAY, SEE ROADWAY PLAN AND GDOT DETAIL M-3A.

**** AN OPPOSITE POCKET LEFT TURN BAY BETWEEN STA 277+07 AND 278+37 SEE ROADWAY PLANS AND CROSS SECTION FOR DETAIL

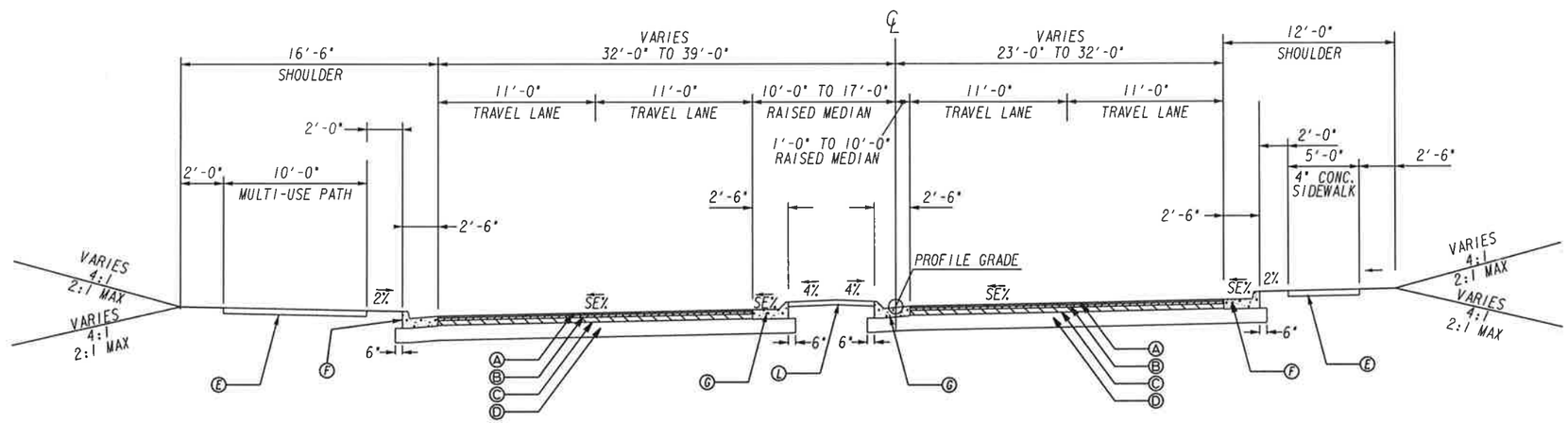

TYPICAL SECTION #14
SUPERELEVATED SECTION
McGINNIS FERRY ROAD
STA 278+37 TO STA 285+32

Ⓐ 165 LB/SY - RECYCLED ASPH CONC 12.5 MM SUPERPAVE, GP 2 ONLY, INCL POLYMER-MODIFIED BITUM MATL & H LIME
Ⓑ 220 LB/SY - RECYCLED ASPH CONC 19 MM SUPERPAVE, GP 1 OR 2, INCL BITUM MATL & H LIME
Ⓒ 660 LB/SY - RECYCLED ASPH CONC 25 MM SUPERPAVE, GP 1 OR 2, INCL BITUM MATL & H LIME
Ⓓ 10" GRADED AGGREGATE BASE COURSE
Ⓔ 4" CONCRETE SIDEWALK/MULTI-USE PATH (8" CONCRETE AT INTERSECTIONS)
Ⓕ CONCRETE CURB AND GUTTER (8"x30"), TYPE 2, GA STD. 9032B
Ⓖ CONCRETE CURB AND GUTTER (8"x30"), TYPE 7, GA STD. 9032B
Ⓗ CONCRETE CURB AND GUTTER (8"x24"), TYPE 2, GA STD. 9032B
Ⓘ CONCRETE CURB AND GUTTER (8"x24"), TYPE 7, GA STD. 9032B
Ⓙ RECYCLED ASPH CONC LEVELING, INCL BITUM MATL & H LIME
Ⓚ MILL ASPH CONC PVMT, VARIABLE DEPTH
Ⓛ 4" RAISED CONCRETE MEDIAN
Ⓜ SAW CUT EXISTING PAVEMENT

SCALE IN FEET
0 5 10 20

REVISION DATES

TYPICAL SECTIONS
MCGINNIS FERRY RD

CHECKED:		DATE:	
BACKCHECKED:		DATE:	
CORRECTED:		DATE:	
VERIFIED:		DATE:	

DRAWING No.
05-0008

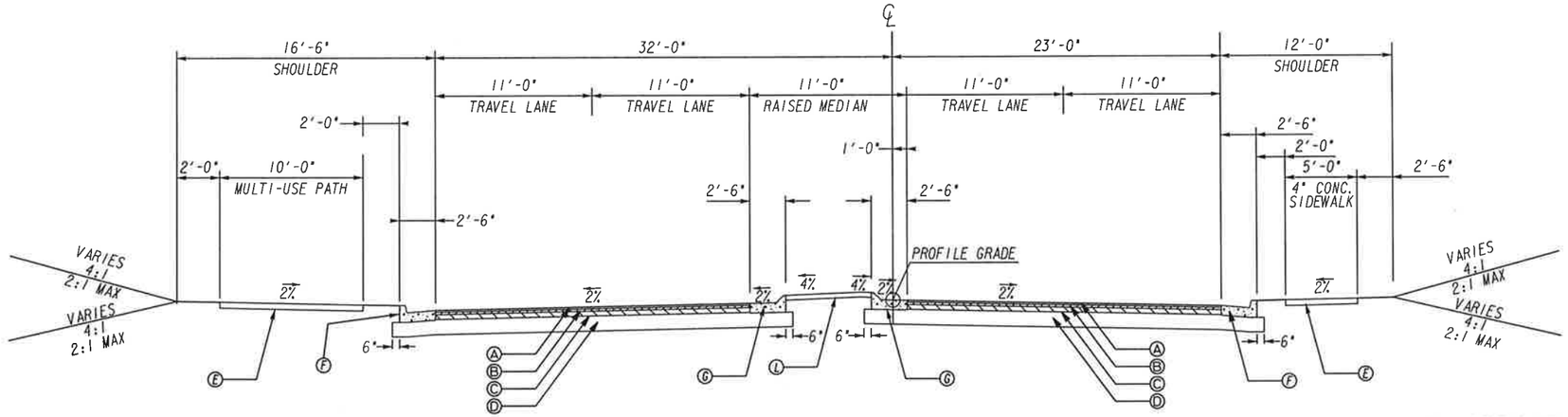

TYPICAL SECTION #15
TANGENT SECTION
McGINNIS FERRY ROAD
STA 285+32 TO STA 285+60

NOTE * 20' RAISED MEDIAN SECTION MAY ALSO TRANSITION TO 12' LEFT TURN LANE (LEFT OR RIGHT) PLUS 8' RAISED MEDIAN SECTION SEE SINGLE LEFT TURN LANE TRANSITIONION DETAIL & PLAN AND CROSS SECTION SHEET FOR DETAILS

** SEE ROADWAY PLANS FOR SUPERELEVATION RATES AND TRANSITIONIONS.

*** FOR U-TURN EYEBROW BAY, SEE ROADWAY PLAN AND GDOT DETAIL M-3A.

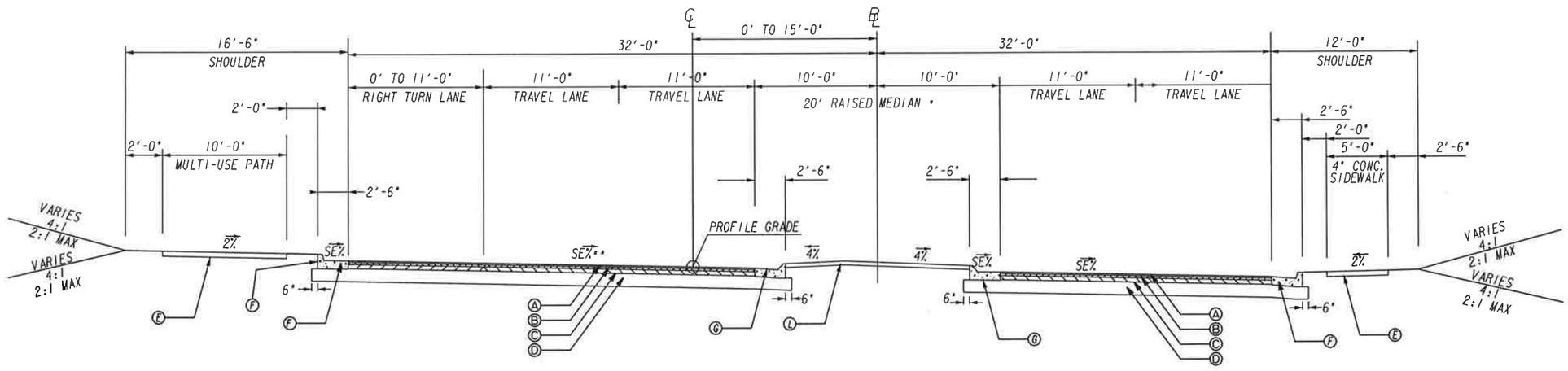

Ⓐ 165 LB/SY - RECYCLED ASPH CONC 12.5 MM SUPERPAVE, GP 2 ONLY, INCL POLYMER-MODIFIED BITUM MATL & H LIME
Ⓑ 220 LB/SY - RECYCLED ASPH CONC 19 MM SUPERPAVE, GP 1 OR 2, INCL BITUM MATL & H LIME
Ⓒ 660 LB/SY - RECYCLED ASPH CONC 25 MM SUPERPAVE, GP 1 OR 2, INCL BITUM MATL & H LIME
Ⓓ 10" GRADED AGGREGATE BASE COURSE
Ⓔ 4" CONCRETE SIDEWALK/MULTI-USE PATH (8" CONCRETE AT INTERSECTIONS)
Ⓕ CONCRETE CURB AND GUTTER (8"x30"), TYPE 2, GA STD. 9032B
Ⓖ CONCRETE CURB AND GUTTER (8"x30"), TYPE 7, GA STD. 9032B
Ⓗ CONCRETE CURB AND GUTTER (8"x24"), TYPE 2, GA STD. 9032B
Ⓘ CONCRETE CURB AND GUTTER (8"x24"), TYPE 7, GA STD. 9032B
Ⓙ RECYCLED ASPH CONC LEVELING, INCL BITUM MATL & H LIME
Ⓚ MILL ASPH CONC PVMT, VARIABLE DEPTH
Ⓛ 4" RAISED CONCRETE MEDIAN
Ⓜ SAW CUT EXISTING PAVEMENT

TYPICAL SECTION #16
SUPERELEVATED SECTION
McGINNIS FERRY ROAD
STA 285+60 TO STA 296+69
STA 297+58 TO STA 300+00

SCALE IN FEET
0 5 10 20

REVISION DATES

TYPICAL SECTIONS
MCGINNIS FERRY RD

CHECKED: DATE:
BACKCHECKED: DATE:
CORRECTED: DATE:
VERIFIED: DATE:

DRAWING NO.
05-0009

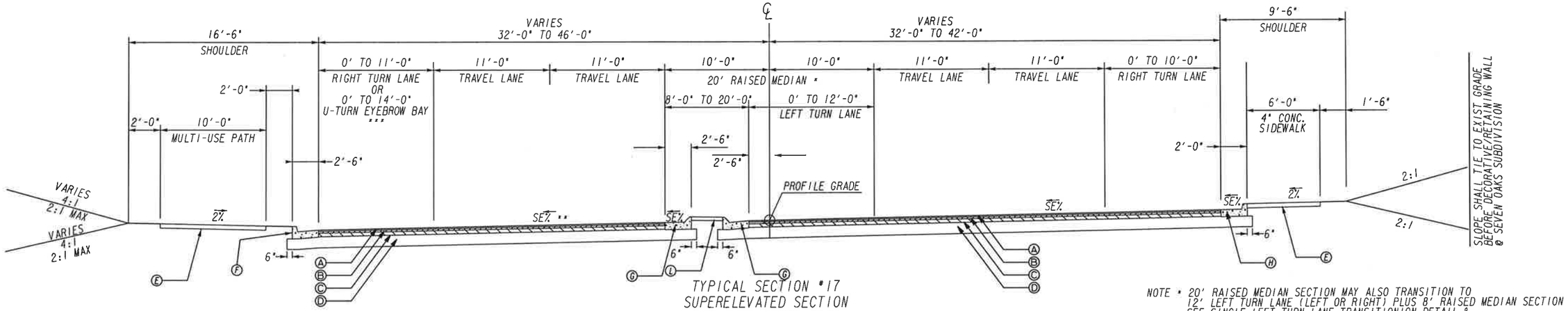

TYPICAL SECTION #17
SUPERELEVATED SECTION
McGINNIS FERRY ROAD
STA 300+00 TO STA 303+35

NOTE * 20' RAISED MEDIAN SECTION MAY ALSO TRANSITION TO 12' LEFT TURN LANE (LEFT OR RIGHT) PLUS 8' RAISED MEDIAN SECTION SEE SINGLE LEFT TURN LANE TRANSITIONION DETAIL & PLAN AND CROSS SECTION SHEET FOR DETAILS

** SEE ROADWAY PLANS FOR SUPERELEVATION RATES AND TRANSITIONIONS.

*** FOR U-TURN EYEBROW BAY, SEE ROADWAY PLAN AND GDOT DETAIL M-3A.

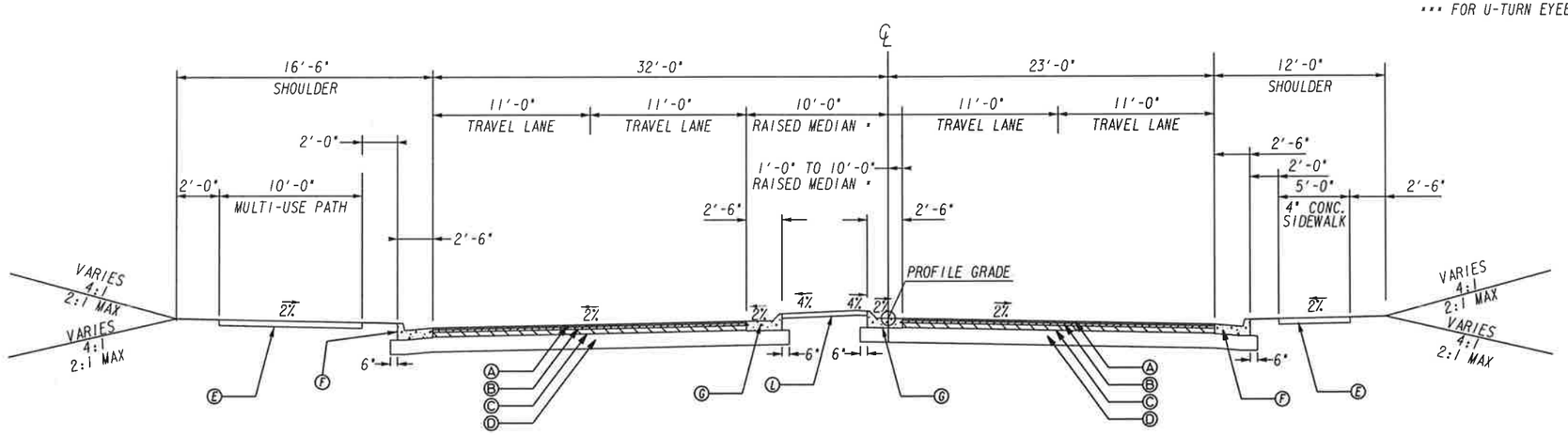

Ⓐ 165 LB/SY - RECYCLED ASPH CONC 12.5 MM SUPERPAVE, GP 2 ONLY, INCL POLYMER-MODIFIED BITUM MATL & H LIME
Ⓑ 220 LB/SY - RECYCLED ASPH CONC 19 MM SUPERPAVE, GP 1 OR 2, INCL BITUM MATL & H LIME
Ⓒ 660 LB/SY - RECYCLED ASPH CONC 25 MM SUPERPAVE, GP 1 OR 2, INCL BITUM MATL & H LIME
Ⓓ 10" GRADED AGGREGATE BASE COURSE
Ⓔ 4" CONCRETE SIDEWALK/MULTI-USE PATH (8" CONCRETE AT INTERSECTIONS)
Ⓕ CONCRETE CURB AND GUTTER (8"x30"), TYPE 2, GA STD. 9032B
Ⓖ CONCRETE CURB AND GUTTER (8"x30"), TYPE 7, GA STD. 9032B
Ⓗ CONCRETE CURB AND GUTTER (8"x24"), TYPE 2, GA STD. 9032B
Ⓘ CONCRETE CURB AND GUTTER (8"x24"), TYPE 7, GA STD. 9032B
Ⓙ RECYCLED ASPH CONC LEVELING, INCL BITUM MATL & H LIME
Ⓚ MILL ASPH CONC PVMT, VARIABLE DEPTH
Ⓛ 4" RAISED CONCRETE MEDIAN
Ⓜ SAW CUT EXISTING PAVEMENT

TYPICAL SECTION #18
TANGENT SECTION
McGINNIS FERRY ROAD
STA 306+72 TO STA 323+65

SCALE IN FEET
0 5 10 20

REVISION DATES

TYPICAL SECTIONS
MCGINNIS FERRY RD

CHECKED: DATE:
BACKCHECKED: DATE:
CORRECTED: DATE:
VERIFIED: DATE:

DRAWING NO.
05-0010

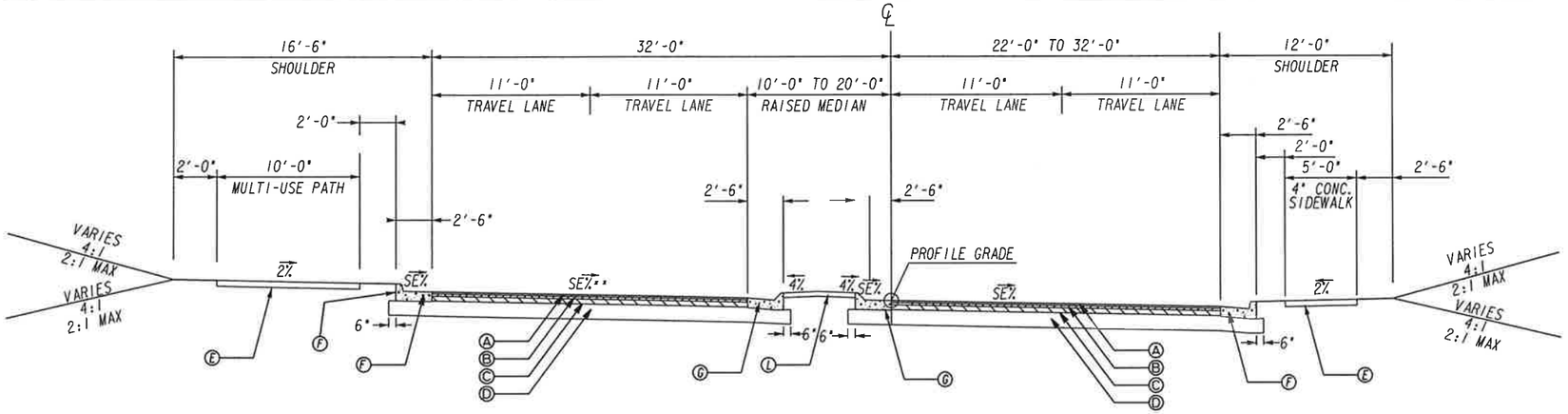

TYPICAL SECTION #19
SUPERELEVATED SECTION
McGINNIS FERRY ROAD
STA 326+02 TO STA 329+90

NOTE
** SEE ROADWAY PLANS FOR SUPERELEVATION RATES AND TRANSITIONIONS.

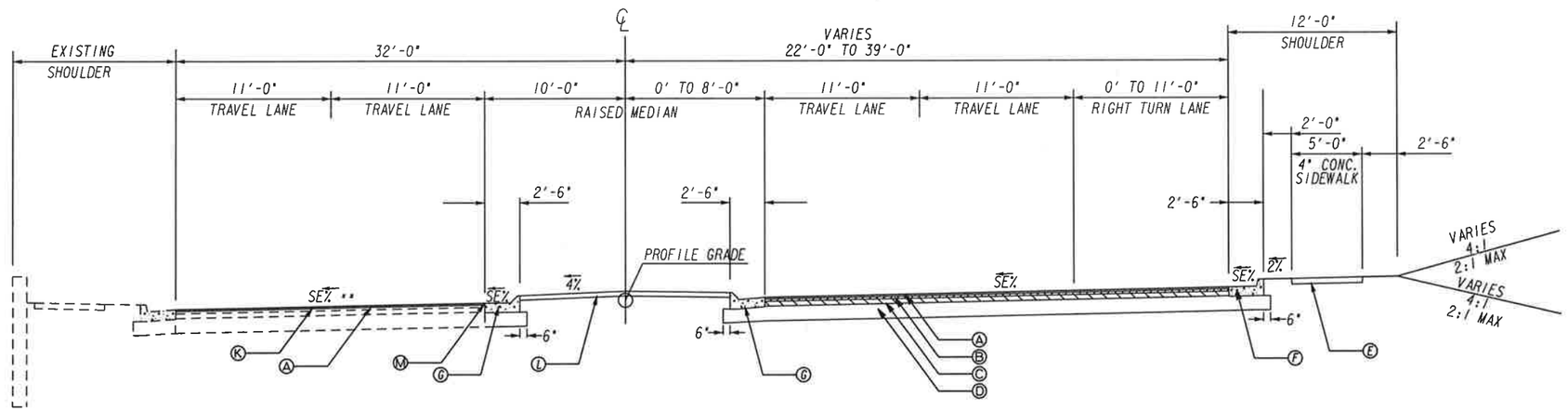

Ⓐ 165 LB/SY - RECYCLED ASPH CONC 12.5 MM SUPERPAVE, GP 2 ONLY, INCL POLYMER-MODIFIED BITUM MATL & H LIME
Ⓑ 220 LB/SY - RECYCLED ASPH CONC 19 MM SUPERPAVE, GP 1 OR 2, INCL BITUM MATL & H LIME
Ⓒ 660 LB/SY - RECYCLED ASPH CONC 25 MM SUPERPAVE, GP 1 OR 2, INCL BITUM MATL & H LIME
Ⓓ 10" GRADED AGGREGATE BASE COURSE
Ⓔ 4" CONCRETE SIDEWALK/MULTI-USE PATH (8" CONCRETE AT INTERSECTIONS)
Ⓕ CONCRETE CURB AND GUTTER (8"x30"), TYPE 2, GA STD. 9032B
Ⓖ CONCRETE CURB AND GUTTER (8"x30"), TYPE 7, GA STD. 9032B
Ⓗ CONCRETE CURB AND GUTTER (8"x24"), TYPE 2, GA STD. 9032B
Ⓘ CONCRETE CURB AND GUTTER (8"x24"), TYPE 7, GA STD. 9032B
Ⓙ RECYCLED ASPH CONC LEVELING, INCL BITUM MATL & H LIME
Ⓚ MILL ASPH CONC PVMT, VARIABLE DEPTH
Ⓛ 4" RAISED CONCRETE MEDIAN
Ⓜ SAW CUT EXISTING PAVEMENT

TYPICAL SECTION #20
SUPERELEVATED SECTION
McGINNIS FERRY ROAD
STA 329+90 TO STA 333+80

SCALE IN FEET
0 5 10 20

REVISION DATES

TYPICAL SECTIONS
MCGINNIS FERRY RD

CHECKED: DATE:
BACKCHECKED: DATE:
CORRECTED: DATE:
VERIFIED: DATE:

DRAWING No.
05-0011

Ⓐ 165 LB/SY - RECYCLED ASPH CONC 12.5 MM SUPERPAVE, GP 2 ONLY, INCL POLYMER-MODIFIED BITUM MATL & H LIME
Ⓑ 220 LB/SY - RECYCLED ASPH CONC 19 MM SUPERPAVE, GP 1 OR 2, INCL BITUM MATL & H LIME
Ⓒ 660 LB/SY - RECYCLED ASPH CONC 25 MM SUPERPAVE, GP 1 OR 2, INCL BITUM MATL & H LIME
Ⓓ 10" GRADED AGGREGATE BASE COURSE
Ⓔ 4" CONCRETE SIDEWALK/MULTI-USE PATH (8" CONCRETE AT INTERSECTIONS)
Ⓕ CONCRETE CURB AND GUTTER (8"x30"), TYPE 2, GA STD. 9032B
Ⓖ CONCRETE CURB AND GUTTER (8"x30"), TYPE 7, GA STD. 9032B
Ⓗ CONCRETE CURB AND GUTTER (8"x24"), TYPE 2, GA STD. 9032B
Ⓘ CONCRETE CURB AND GUTTER (8"x24"), TYPE 7, GA STD. 9032B
Ⓙ RECYCLED ASPH CONC LEVELING, INCL BITUM MATL & H LIME
Ⓚ MILL ASPH CONC PVMT, VARIABLE DEPTH
Ⓛ 4" RAISED CONCRETE MEDIAN
Ⓜ SAW CUT EXISTING PAVEMENT
Ⓝ SAFETY EDGE TREATMENT

NOTE
** SEE ROADWAY PLANS FOR SUPERELEVATION RATES AND TRANSITIONIONS.
***** RAISED MEDIAN TIES TO EXISTING MEDIAN AT STA 335+32 W/ WIDTH OF 18 FEET

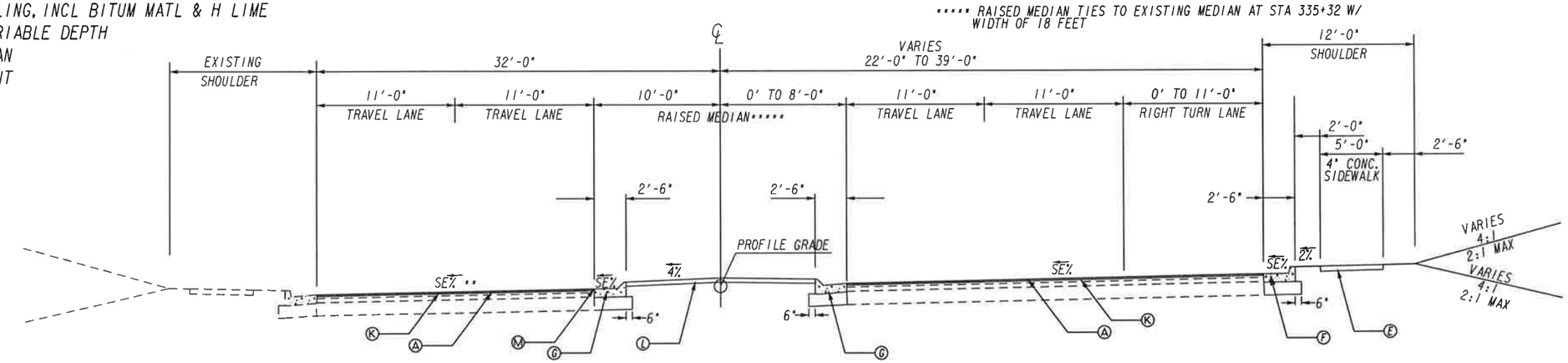

TYPICAL SECTION #21
SUPERELEVATED SECTION
McGINNIS FERRY ROAD
STA 333+80 TO STA 335+53

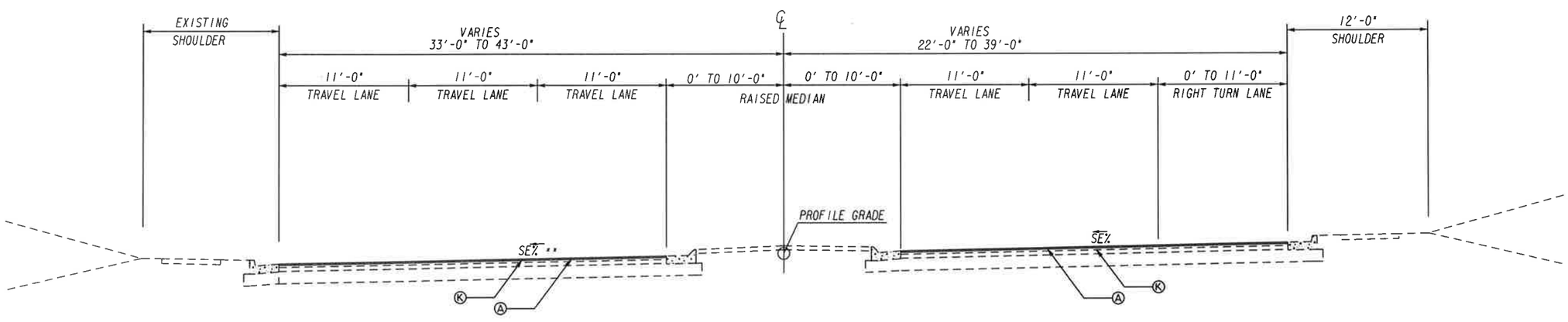

TYPICAL SECTION #22
SUPERELEVATED SECTION
McGINNIS FERRY ROAD
STA 335+53 TO STA 350+30.62

SCALE IN FEET
0 5 10 20

REVISION DATES

TYPICAL SECTIONS
MCGINNIS FERRY RD

CHECKED: DATE:
BACKCHECKED: DATE:
CORRECTED: DATE:
VERIFIED: DATE:

DRAWING No.
05-0012

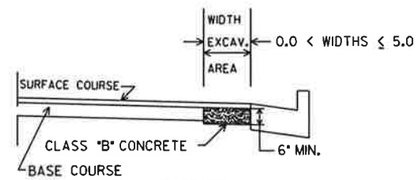

NO SCALE

CLASS "B" CONCRETE BASE OR PAVEMENT WIDENING
Item Code 500-9999 - Cu. Yds.

BOTTOM OF CLASS B SHOULD MATCH BOTTOM OF EXISTING GAB.
IN EXCAVATED AREAS BETWEEN THE EXISTING PAVING AND NEW CURB AND GUTTER THAT ARE 5'-0" OR LESS IN WIDTH, CLASS "B" CONCRETE SHALL BE PLACED IN LIEU OF THE BASE AND PAVING SPECIFIED BY THE TYPICAL SECTION. PAYMENT WILL BE MADE UNDER "CLASS B CONCRETE BASE AND PAVEMENT WIDENING".

IN EXCAVATED AREAS GREATER THAN 5'-0" IN WIDTH, THE CONTRACTOR SHALL PLACE BASE AND PAVING AS SPECIFIED ON THE TYPICAL SECTION.

SEE PLANS FOR DETAILS OF CURB AND GUTTER CONSTRUCTION.

CLASS "B" CONCRETE BASE OR WIDENING DETAIL

TYPICAL SECTION DETAIL TO BE USED WHEN
EXISTING PAVEMENT IS TO BE RESURFACED WITH
TWO INCHES OR MORE OF ASPHALTIC CONCRETE

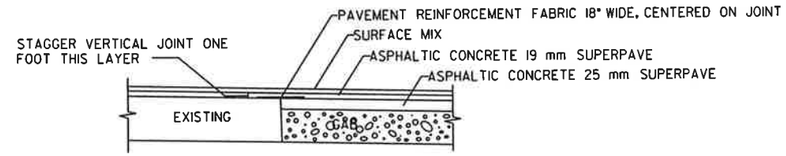

TYPICAL SECTION DETAIL TO BE USED WHEN
EXISTING PAVEMENT IS TO BE RESURFACED WITH
LESS THAN TWO INCHES OF ASPHALTIC CONCRETE

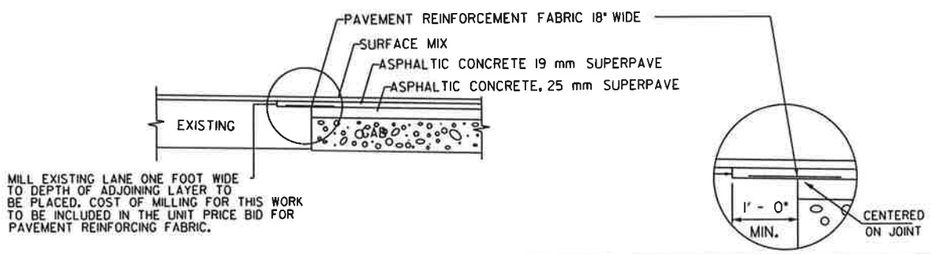

ALLOWABLE RANGES TABLE

FOR THIS PROJECT, CROSS SLOPES THAT ARE ADJUSTED TO "BEST FIT" EXISTING PAVEMENT SLOPES ARE SUBJECT TO THE FOLLOWING LIMITS:

A. NORMAL CROWN

SECTION WITH GRADES 0.5% OR GREATER	SECTION WITH GRADES LESS THAN 0.5%
0.0150 FT/FT - MINIMUM	0.0156 FT/FT - MINIMUM
0.0208 FT/FT - DESIRABLE	0.0208 FT/FT - DESIRABLE
0.0250 FT/FT - MAXIMUM	0.0300 FT/FT - MAXIMUM

B. SUPERELEVATION RATE

S.E. RATE SHOWN ON PLANS OR SE RATE EXISTING IN FIELD, WHICHEVER IS GREATER.

C. SUPERELEVATION TRANSITION LENGTH (LENGTH FROM FLAT POINT TO FULL SE)

	RATE OF CHANGE	CORRESPONDING DIFFERENCE IN GRADE BETWEEN PIVOT POINT AND EDGE OF PAVEMENT
MINIMUM	1:150	0.67%
DESIRABLE	1:200	0.50%
MAXIMUM	1:300	0.33%

LENGTH SHALL BE SET TO AVOID CREATING A FLAT GUTTER GRADE ON LOW SIDE AND TO AVOID FLAT CROSS SLOPES AT OR NEAR THE LOW POINT OF VERTICAL CURVES.

D. POSITIONING OF SUPERELEVATION TRANSITION LENGTH ON SIMPLE CURVES

50% OF TRANSITION INSIDE CURVE - MAXIMUM
33% OF TRANSITION INSIDE CURVE - DESIRABLE
20% OF TRANSITION INSIDE CURVE - MINIMUM

NOTE: CROWN WIPE-OUT SHALL BE AT THE SAME RATE AS THE SE TRANSITION.

E. SMOOTHING OF BREAKS IN EDGE PROFILE AT BEGIN AND END OF TRANSITION SHALL BE ACCOMPLISHED BY VERTICAL CURVE WITH A MINIMUM LENGTH (IN FEET) EQUAL TO THE SPEED DESIGN (IN MPH).

SCALE IN FEET
0 5 10 20

REVISION DATES

TYPICAL SECTIONS
MCGINNIS FERRY RD

CHECKED: DATE:
BACKCHECKED: DATE:
CORRECTED: DATE:
VERIFIED: DATE:

DRAWING No.
05-0013

Ⓐ 165 LB/SY - RECYCLED ASPH CONC 12.5 MM SUPERPAVE, GP 2 ONLY, INCL POLYMER-MODIFIED BITUM MATL & H LIME
Ⓑ 220 LB/SY - RECYCLED ASPH CONC 19 MM SUPERPAVE, GP 1 OR 2, INCL BITUM MATL & H LIME
Ⓒ 660 LB/SY - RECYCLED ASPH CONC 25 MM SUPERPAVE, GP 1 OR 2, INCL BITUM MATL & H LIME
Ⓓ 10" GRADED AGGREGATE BASE COURSE
Ⓔ 4" CONCRETE SIDEWALK/MULTI-USE PATH (8" CONCRETE AT INTERSECTIONS)
Ⓕ CONCRETE CURB AND GUTTER (8"x30"), TYPE 2, GA STD. 9032B
Ⓖ CONCRETE CURB AND GUTTER (8"x30"), TYPE 7, GA STD. 9032B
Ⓗ CONCRETE CURB AND GUTTER (8"x24"), TYPE 2, GA STD. 9032B
Ⓘ CONCRETE CURB AND GUTTER (8"x24"), TYPE 7, GA STD. 9032B
Ⓙ RECYCLED ASPH CONC LEVELING, INCL BITUM MATL & H LIME
Ⓚ MILL ASPH CONC PVMT, VARIABLE DEPTH
Ⓛ 4" RAISED CONCRETE MEDIAN
Ⓜ SAW CUT EXISTING PAVEMENT
Ⓝ SAFETY EDGE TREATMENT

NOTE:
1. THE FOLLOWING SIDE ROADS TO BE CONSTRUCTED WITH PROPOSED SIDE ROAD PROFILE AND TIE TO EXISTING GRADE FROM MAINLINE IN SHORT DISDANCE. THEREFORE, NEITHER TYPICAL SECTION NOR CROSS SECTION IS PROVIDED.
   - PENNIMAN DR
   - MCFARLAND PKWY
   - TIDEWATER CROSSING
   - WINDWARD RIDGE DR (LT) AND (RT)
   - FAIRCROFT DR
   - WINGATE TRAIL
   - CHRISTOPHER ROBIN RD
   - CONCORD HALL DR
   - MCGINNIS VILLAGE PI
   - VICARAGE WALK
   - ASHEWOODE DOWNS DR
   - MONTVALE XING
   - BROOKWOOD WAY
   - FAWN LAKE RD
2. ALL DRIVEWAYS TO BE CONSTRUCTED WITH PROPOSED DRIVEWAY PROFILE EXCEPT FOR DRIVEWAY 4A & 4B, WHOSE TYPCIAL SECTION AND CROSS SECTIONS ARE PROVIDED.

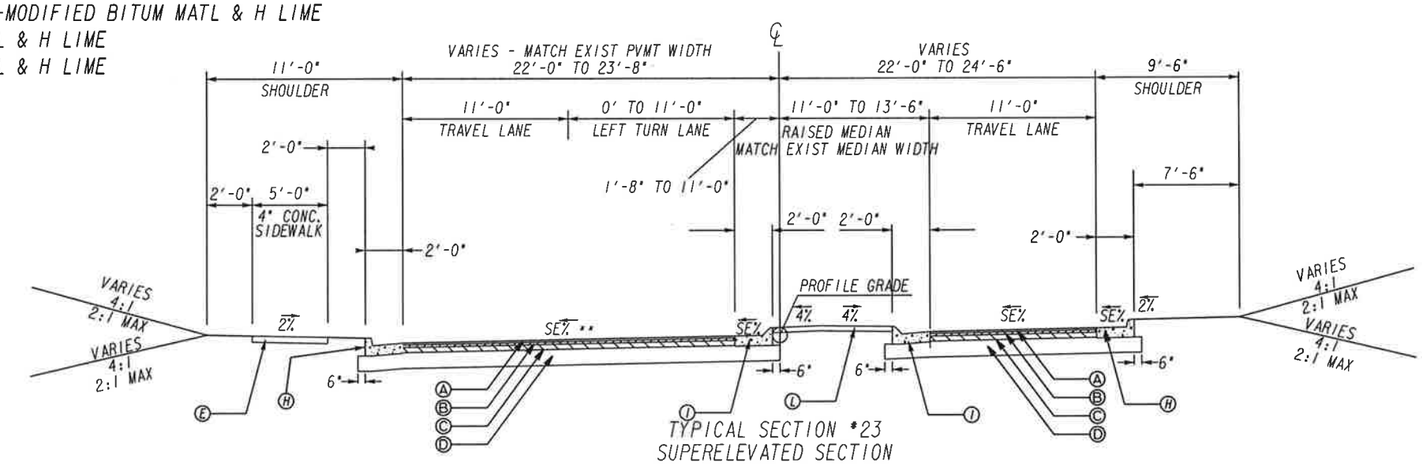

TYPICAL SECTION #23
SUPERELEVATED SECTION
UNION HILL ROAD
STA 20+00 TO STA 22+40
(MILL AND OVERLAY BETWEEN STA 22+00
AND STA 22+40)

NOTE ** SEE ROADWAY PLANS FOR SUPERELEVATION RATES AND TRANSITIONIONS.

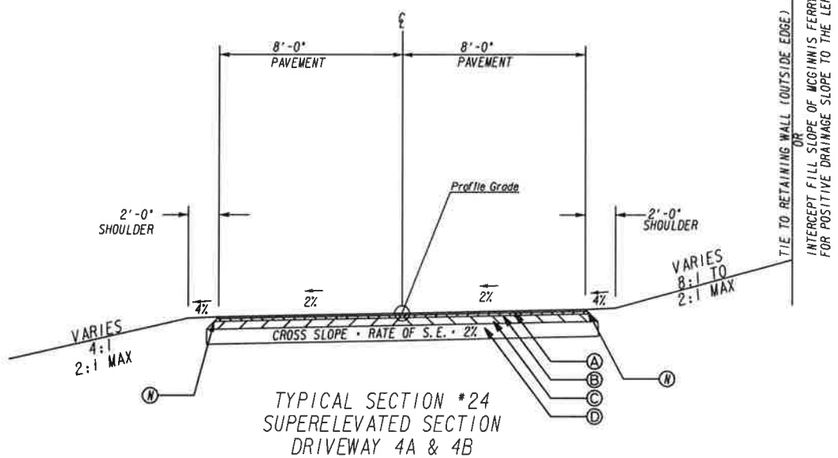

TYPICAL SECTION #24
SUPERELEVATED SECTION
DRIVEWAY 4A & 4B
STA 4+00 TO STA 11+50

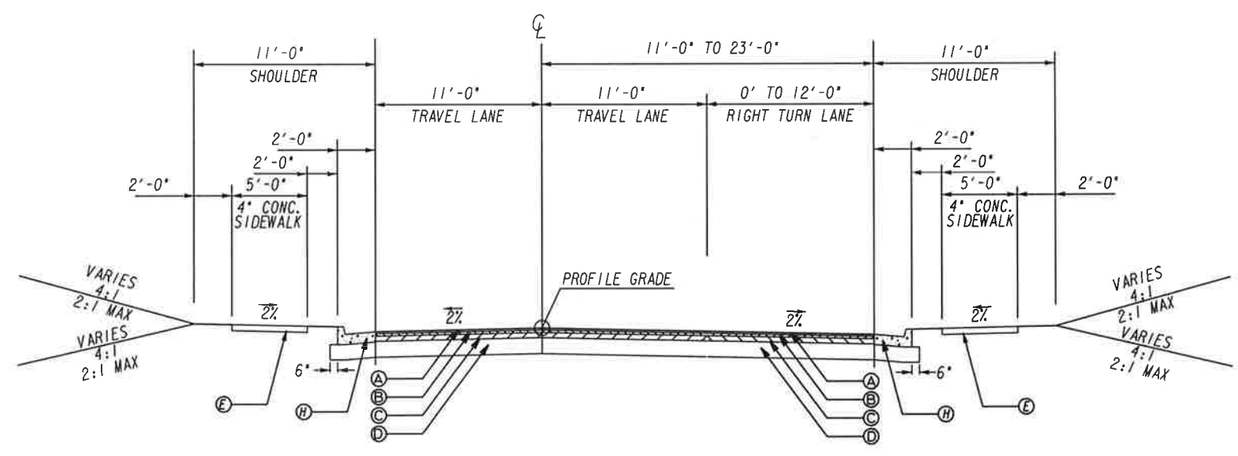

TYPICAL SECTION #25
TANGENT SECTION
OLD ALPHARETTA ROAD
STA 34+05 TO STA 40+00
(MILL AND OVERLAY ON EXIST PVMT
BETWEEN STA 34+05
AND STA 36+00)

SCALE IN FEET
0 5 10 20

REVISION DATES

TYPICAL SECTIONS
MCGINNIS FERRY RD

CHECKED: DATE:
BACKCHECKED: DATE:
CORRECTED: DATE:
VERIFIED: DATE:

DRAWING NO.
05-0014

Ⓐ 165 LB/SY - RECYCLED ASPH CONC 12.5 MM SUPERPAVE, GP 2 ONLY, INCL POLYMER-MODIFIED BITUM MATL & H LIME
Ⓑ 220 LB/SY - RECYCLED ASPH CONC 19 MM SUPERPAVE, GP 1 OR 2, INCL BITUM MATL & H LIME
Ⓒ 660 LB/SY - RECYCLED ASPH CONC 25 MM SUPERPAVE, GP 1 OR 2, INCL BITUM MATL & H LIME
Ⓓ 10" GRADED AGGREGATE BASE COURSE
Ⓔ 4" CONCRETE SIDEWALK/MULTI-USE PATH (8" CONCRETE AT INTERSECTIONS)
Ⓕ CONCRETE CURB AND GUTTER (8"x30"), TYPE 2, GA STD. 9032B
Ⓖ CONCRETE CURB AND GUTTER (8"x30"), TYPE 7, GA STD. 9032B
Ⓗ CONCRETE CURB AND GUTTER (8"x24"), TYPE 2, GA STD. 9032B
Ⓘ CONCRETE CURB AND GUTTER (8"x24"), TYPE 7, GA STD. 9032B
Ⓙ RECYCLED ASPH CONC LEVELING, INCL BITUM MATL & H LIME
Ⓚ MILL ASPH CONC PVMT, VARIABLE DEPTH
Ⓛ 4" RAISED CONCRETE MEDIAN
Ⓜ SAW CUT EXISTING PAVEMENT
Ⓝ SAFETY EDGE TREATMENT

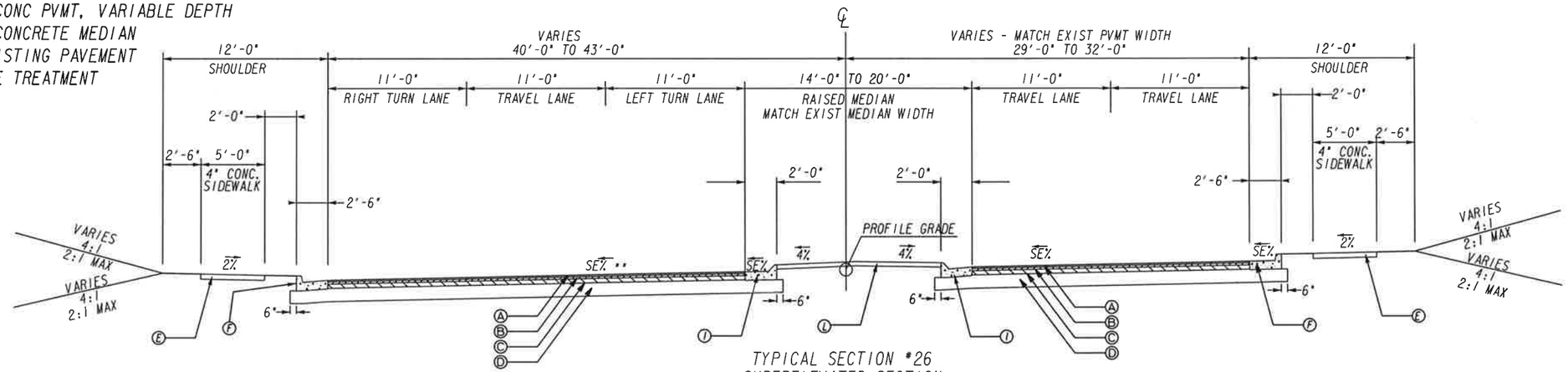

TYPICAL SECTION #26
SUPERELEVATED SECTION
WINDWARD PARKWAY
STA 60+00 TO STA 61+55

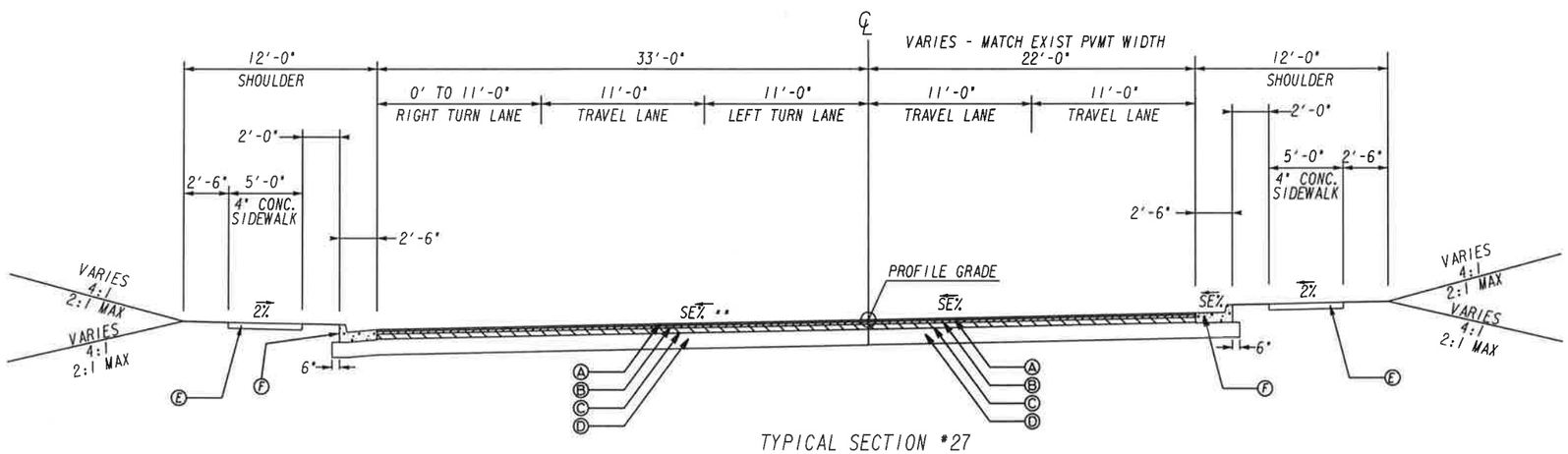

TYPICAL SECTION #27
SUPERELEVATED SECTION
WINDWARD PARKWAY
STA 61+55 TO STA 64+28
(MILL AND OVERLAY ON EXIST PVMT
BETWEEN STA 62+00 AND STA 64+28)

NOTE ** SEE ROADWAY PLANS FOR SUPERELEVATION RATES AND TRANSITIONION

SCALE IN FEET
0 5 10 20

REVISION DATES

TYPICAL SECTIONS
MCGINNIS FERRY RD

CHECKED: DATE:
BACKCHECKED: DATE:
CORRECTED: DATE:
VERIFIED: DATE:

DRAWING No.
05-0015

Ⓐ 165 LB/SY - RECYCLED ASPH CONC 12.5 MM SUPERPAVE, GP 2 ONLY, INCL POLYMER-MODIFIED BITUM MATL & H LIME
Ⓑ 220 LB/SY - RECYCLED ASPH CONC 19 MM SUPERPAVE, GP 1 OR 2, INCL BITUM MATL & H LIME
Ⓒ 660 LB/SY - RECYCLED ASPH CONC 25 MM SUPERPAVE, GP 1 OR 2, INCL BITUM MATL & H LIME
Ⓓ 10" GRADED AGGREGATE BASE COURSE
Ⓔ 4" CONCRETE SIDEWALK/MULTI-USE PATH (8" CONCRETE AT INTERSECTIONS)
Ⓕ CONCRETE CURB AND GUTTER (8"x30"), TYPE 2, GA STD. 9032B
Ⓖ CONCRETE CURB AND GUTTER (8"x30"), TYPE 7, GA STD. 9032B
Ⓗ CONCRETE CURB AND GUTTER (8"x24"), TYPE 2, GA STD. 9032B
Ⓘ CONCRETE CURB AND GUTTER (8"x24"), TYPE 7, GA STD. 9032B
Ⓙ RECYCLED ASPH CONC LEVELING, INCL BITUM MATL & H LIME
Ⓚ MILL ASPH CONC PVMT, VARIABLE DEPTH
Ⓛ 4" RAISED CONCRETE MEDIAN
Ⓜ SAW CUT EXISTING PAVEMENT
Ⓝ SAFETY EDGE TREATMENT

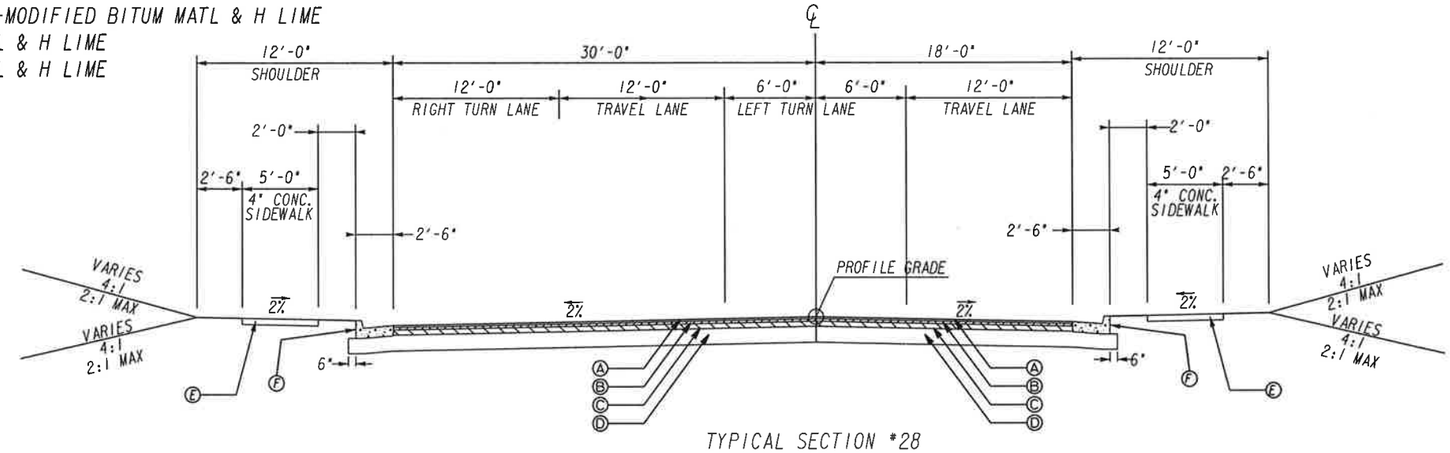

TYPICAL SECTION #28
TANGENT SECTION
FLYNN CROSSING
STA 67+10 TO STA 68+65
(MILL AND OVERLAY ON EXIST PVMT
BETWEEN STA 67+10 AND STA 68+50)

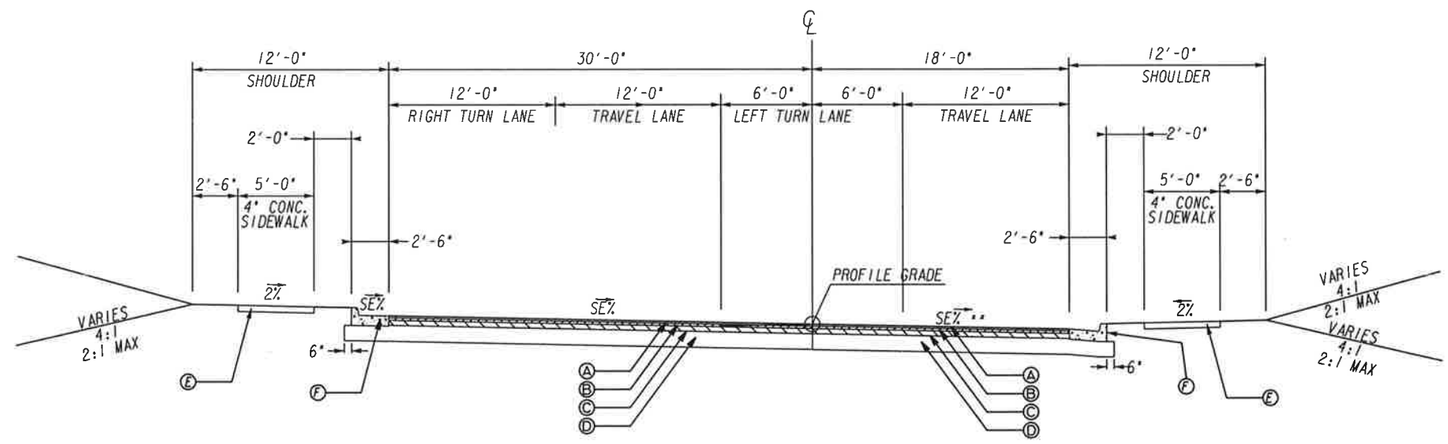

TYPICAL SECTION #29
SUPERELEVATED SECTION
FLYNN CROSSING
STA 68+65 TO STA 70+00

NOTE ** SEE ROADWAY PLANS FOR SUPERELEVATION RATES AND TRANSITIONIONS.

SCALE IN FEET
0 5 10 20

REVISION DATES

TYPICAL SECTIONS
MCGINNIS FERRY RD

CHECKED:		DATE:	
BACKCHECKED:		DATE:	
CORRECTED:		DATE:	
VERIFIED:		DATE:	

DRAWING No.
05-0016

Ⓐ 165 LB/SY - RECYCLED ASPH CONC 12.5 MM SUPERPAVE, GP 2 ONLY, INCL POLYMER-MODIFIED BITUM MATL & H LIME
Ⓑ 220 LB/SY - RECYCLED ASPH CONC 19 MM SUPERPAVE, GP 1 OR 2, INCL BITUM MATL & H LIME
Ⓒ 660 LB/SY - RECYCLED ASPH CONC 25 MM SUPERPAVE, GP 1 OR 2, INCL BITUM MATL & H LIME
Ⓓ 10" GRADED AGGREGATE BASE COURSE
Ⓔ 4" CONCRETE SIDEWALK/MULTI-USE PATH (8" CONCRETE AT INTERSECTIONS)
Ⓕ CONCRETE CURB AND GUTTER (8"x30"), TYPE 2, GA STD. 9032B
Ⓖ CONCRETE CURB AND GUTTER (8"x30"), TYPE 7, GA STD. 9032B
Ⓗ CONCRETE CURB AND GUTTER (8"x24"), TYPE 2, GA STD. 9032B
Ⓘ CONCRETE CURB AND GUTTER (8"x24"), TYPE 7, GA STD. 9032B
Ⓙ RECYCLED ASPH CONC LEVELING, INCL BITUM MATL & H LIME
Ⓚ MILL ASPH CONC PVMT, VARIABLE DEPTH
Ⓛ 4" RAISED CONCRETE MEDIAN
Ⓜ SAW CUT EXISTING PAVEMENT
Ⓝ SAFETY EDGE TREATMENT

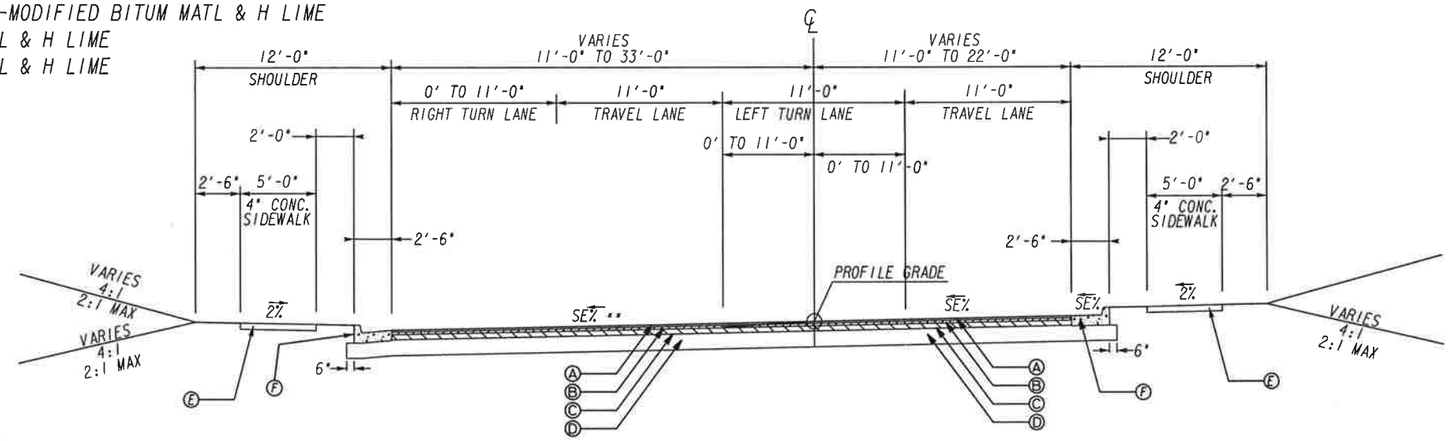

TYPICAL SECTION #30
SUPERELEVATED SECTION
DOUGLAS ROAD
STA 70+00 TO STA 74+73
(MILL AND OVERLAY ON EXIST PVMT
BETWEEN STA 74+00 AND STA 74+73)

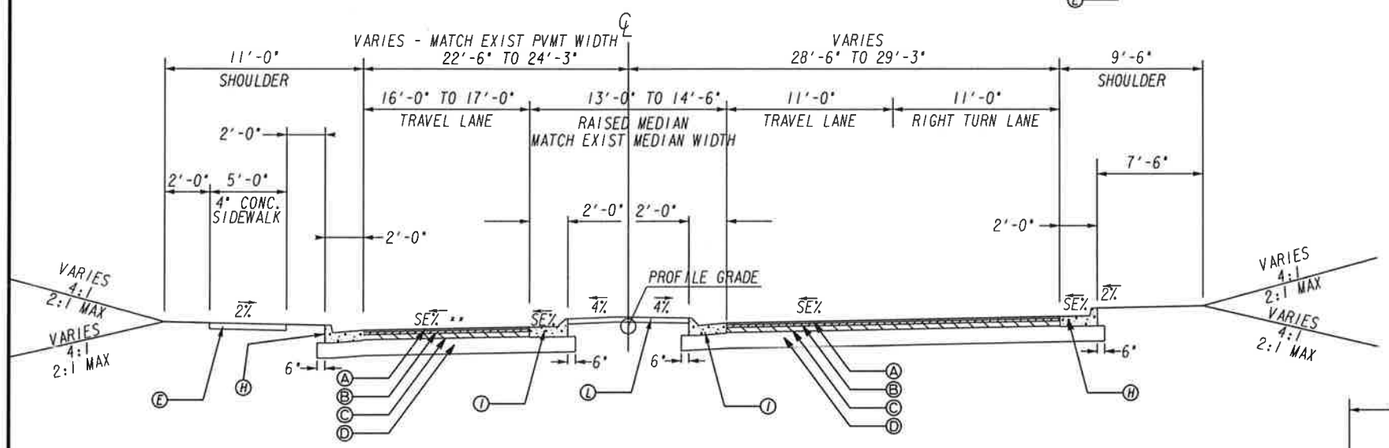

TYPICAL SECTION #34
SUPERELEVATED SECTION
BRASSFIELD DRIVE
SEVEN OAKS PARKWAY
STA 72+77 TO STA 76+15
(MILL AND OVERLAY BETWEEN STA 72+77
AND STA 73+60 AND BETWEEN STA 76+00
AND STA 76+15)

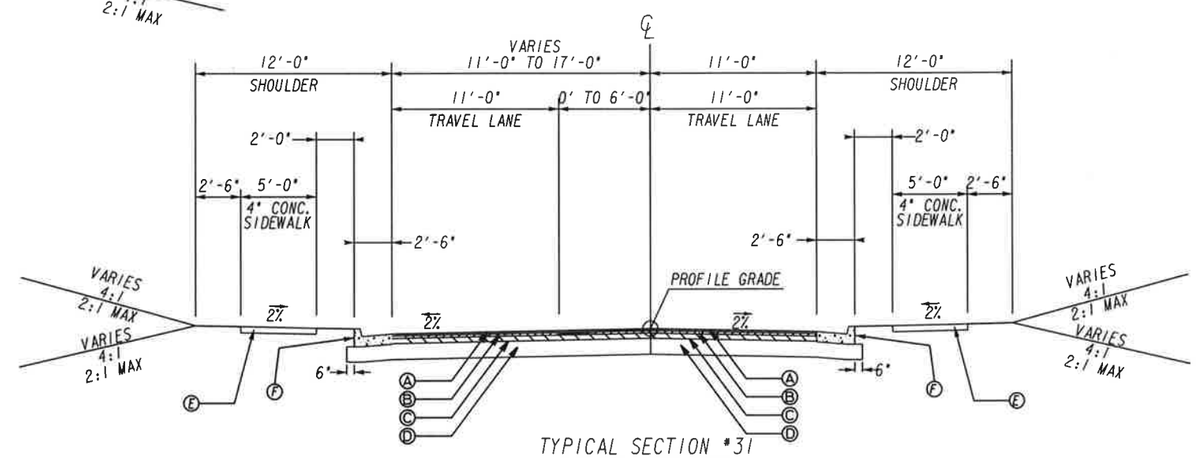

TYPICAL SECTION #31
TANGENT SECTION
DOUGLAS ROAD
STA 74+73 TO 75+10
(MILL AND OVERLAY ON EXIST PVMT
BETWEEN STA 74+73 AND STA 75+10)

NOTE ** SEE ROADWAY PLANS FOR SUPERELEVATION RATES AND TRANSITIONIONS.

SCALE IN FEET
0 5 10 20

REVISION DATES

TYPICAL SECTIONS
MCGINNIS FERRY RD

CHECKED:		DATE:	
BACKCHECKED:		DATE:	
CORRECTED:		DATE:	
VERIFIED:		DATE:	

DRAWING No.
05-0017

Ⓐ 165 LB/SY - RECYCLED ASPH CONC 12.5 MM SUPERPAVE, GP 2 ONLY, INCL POLYMER-MODIFIED BITUM MATL & H LIME
Ⓑ 220 LB/SY - RECYCLED ASPH CONC 19 MM SUPERPAVE, GP 1 OR 2, INCL BITUM MATL & H LIME
Ⓒ 660 LB/SY - RECYCLED ASPH CONC 25 MM SUPERPAVE, GP 1 OR 2, INCL BITUM MATL & H LIME
Ⓓ 10" GRADED AGGREGATE BASE COURSE
Ⓔ 4" CONCRETE SIDEWALK/MULTI-USE PATH (8" CONCRETE AT INTERSECTIONS)
Ⓕ CONCRETE CURB AND GUTTER (8"x30"), TYPE 2, GA STD. 9032B
Ⓖ CONCRETE CURB AND GUTTER (8"x30"), TYPE 7, GA STD. 9032B
Ⓗ CONCRETE CURB AND GUTTER (8"x24"), TYPE 2, GA STD. 9032B
Ⓘ CONCRETE CURB AND GUTTER (8"x24"), TYPE 7, GA STD. 9032B
Ⓙ RECYCLED ASPH CONC LEVELING, INCL BITUM MATL & H LIME
Ⓚ MILL ASPH CONC PVMT, VARIABLE DEPTH
Ⓛ 4" RAISED CONCRETE MEDIAN
Ⓜ SAW CUT EXISTING PAVEMENT
Ⓝ SAFETY EDGE TREATMENT

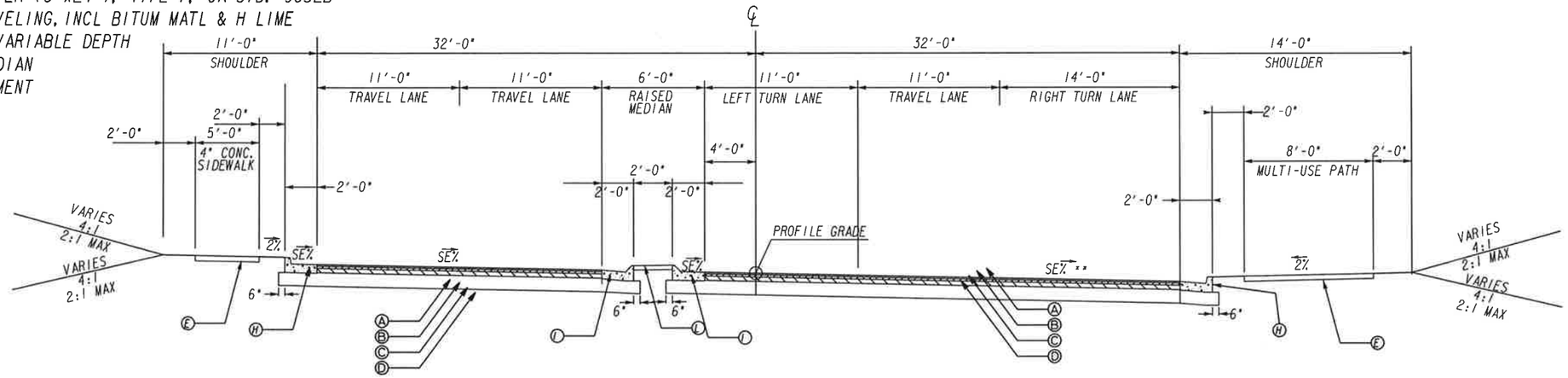

TYPICAL SECTION #32
SUPERELEVATED SECTION
BROOKWOOD ROAD
STA 53+03 TO STA 55+00

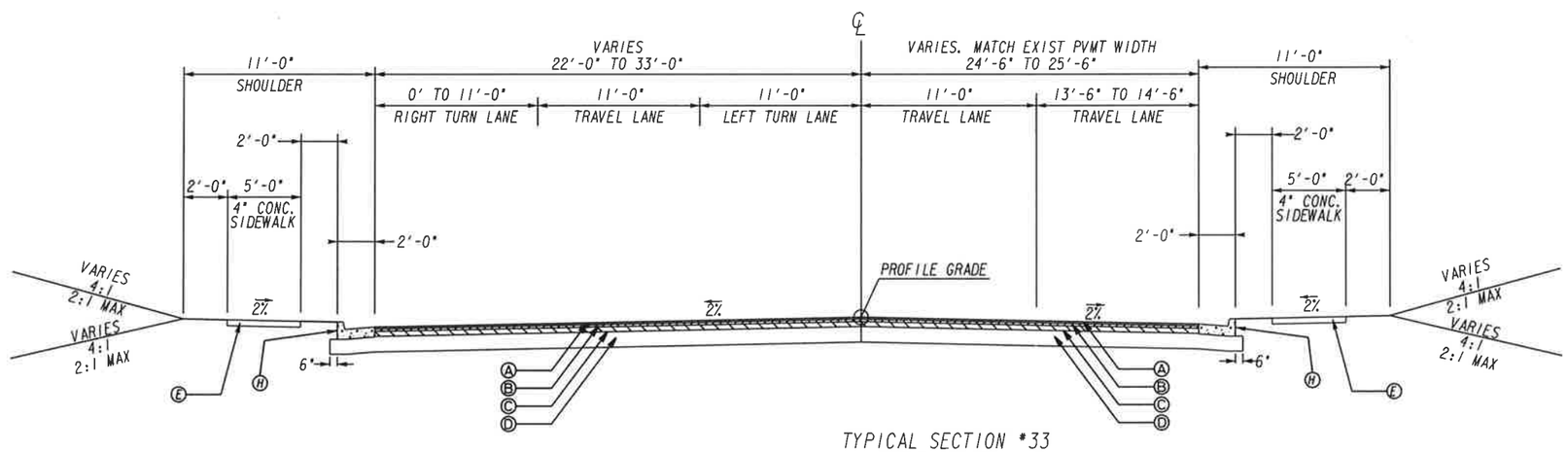

TYPICAL SECTION #33
TANGENT SECTION
JONES BRIDGE ROAD
STA 55+50 TO STA 59+47
(MILL AND OVERLAY ON EXIST PVMT
BETWEEN STA 57+50 AND STA 59+47)

NOTE ** SEE ROADWAY PLANS FOR SUPERELEVATION RATES AND TRANSITIONIONS.

SCALE IN FEET
0 5 10 20

REVISION DATES

TYPICAL SECTIONS
MCGINNIS FERRY RD

CHECKED:		DATE:	
BACKCHECKED:		DATE:	
CORRECTED:		DATE:	
VERIFIED:		DATE:	

DRAWING No.
05-0018

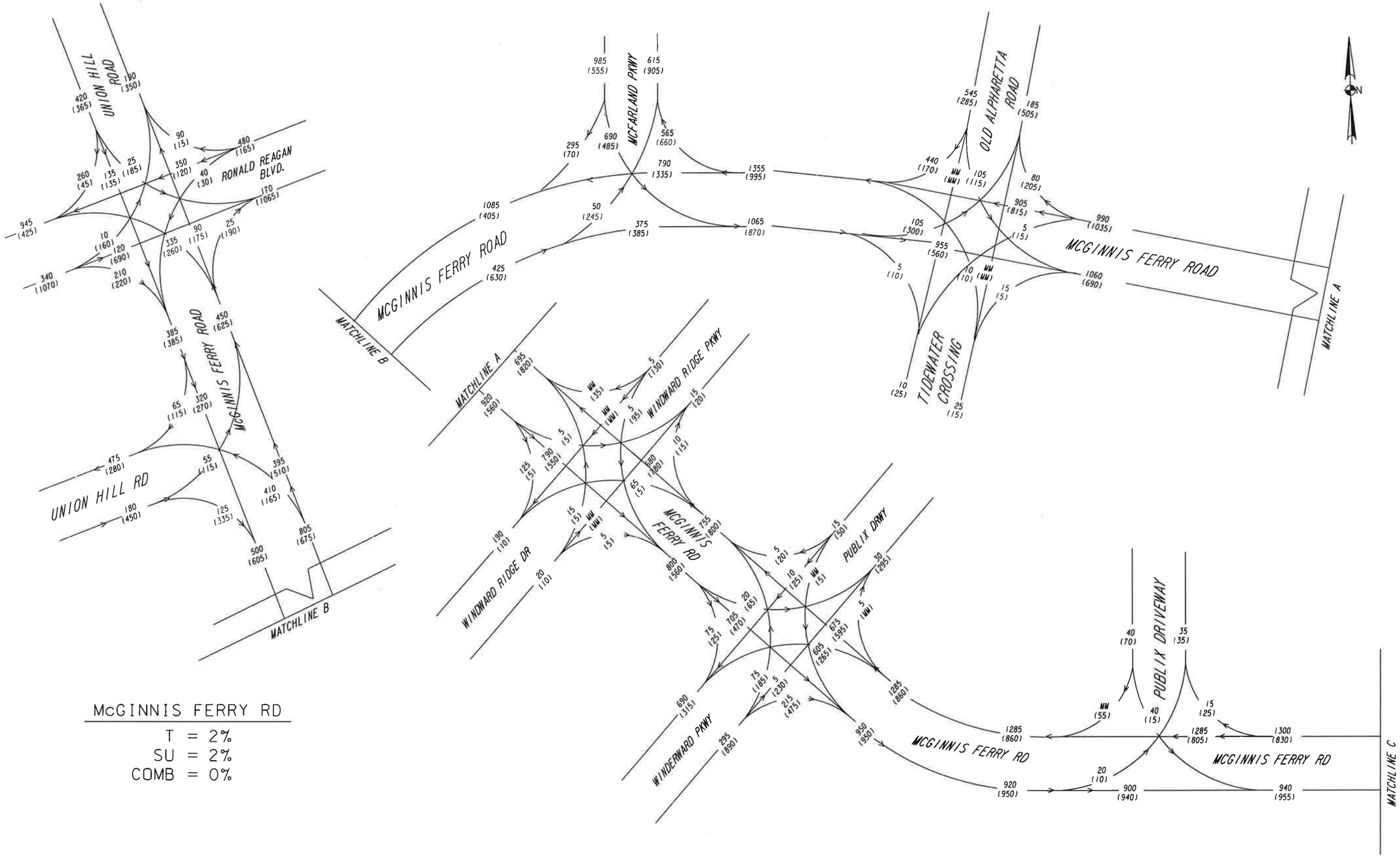

McGINNIS FERRY RD

T = 2%
SU = 2%
COMB = 0%

2015 EXISTING AM DHV = 000
2015 EXISTING PM DHV = (000)

Moreland Altobelli Associates, Inc.
2450 Commerce Avenue, Suite 100
Duluth, Ga. 30096-8910
Telephone (770) 263-5945

REVISION DATES

TRAFFIC DIAGRAMS
MCGINNIS FERRY RD

CHECKED: DATE:
BACKCHECKED: DATE:
CORRECTED: DATE:
VERIFIED: DATE:

DRAWING No. 10-0001

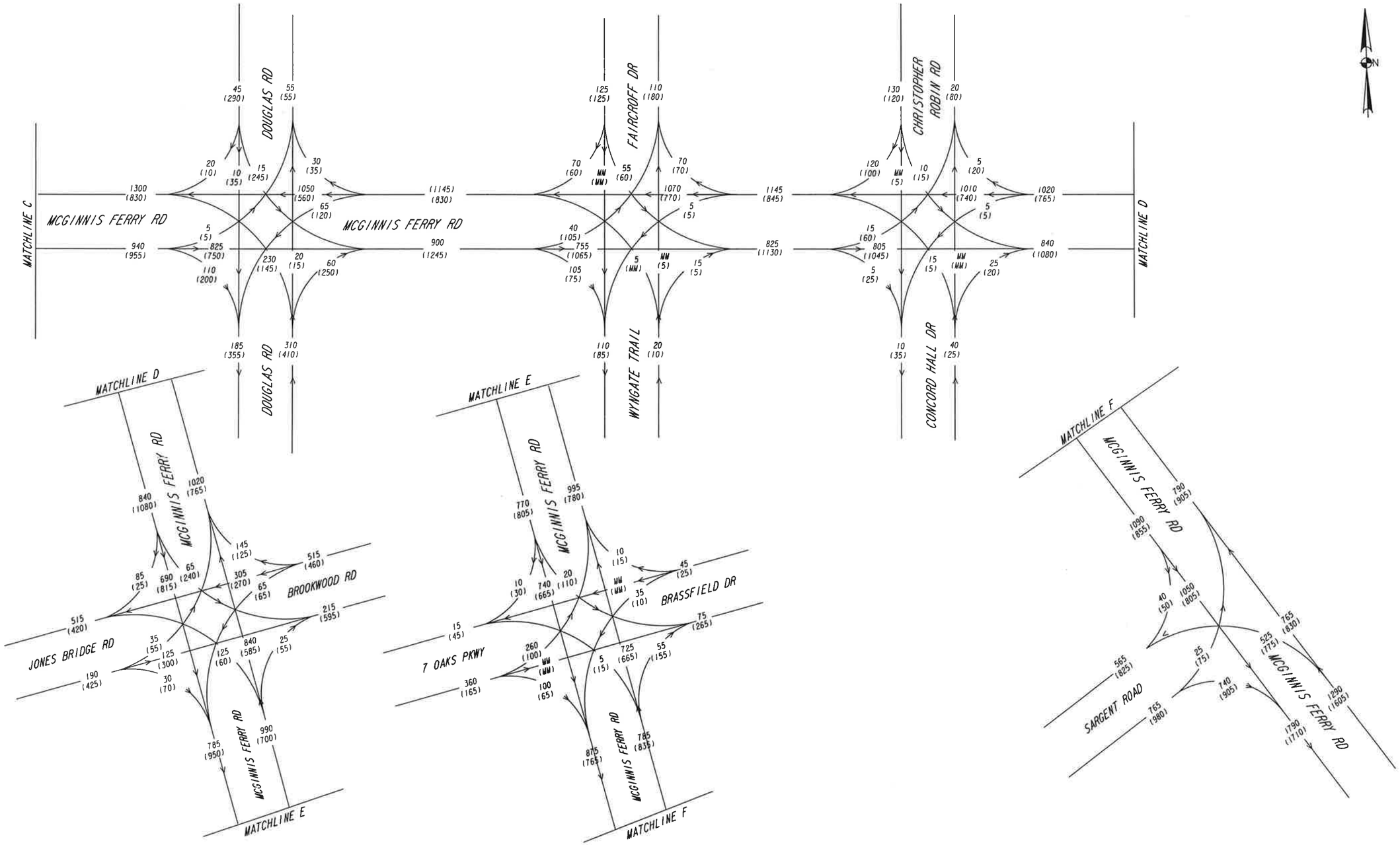

2015 EXISTING AM DHV = 000
2015 EXISTING PM DHV = (000)

Moreland Altobelli Associates, Inc.
2450 Commerce Avenue, Suite 100
Duluth, Ga. 30096-8910
Telephone (770) 263-5945

REVISION DATES

TRAFFIC DIAGRAMS
MCGINNIS FERRY RD

CHECKED:		DATE:	
BACKCHECKED:		DATE:	
CORRECTED:		DATE:	
VERIFIED:		DATE:	

DRAWING No. 10-0002

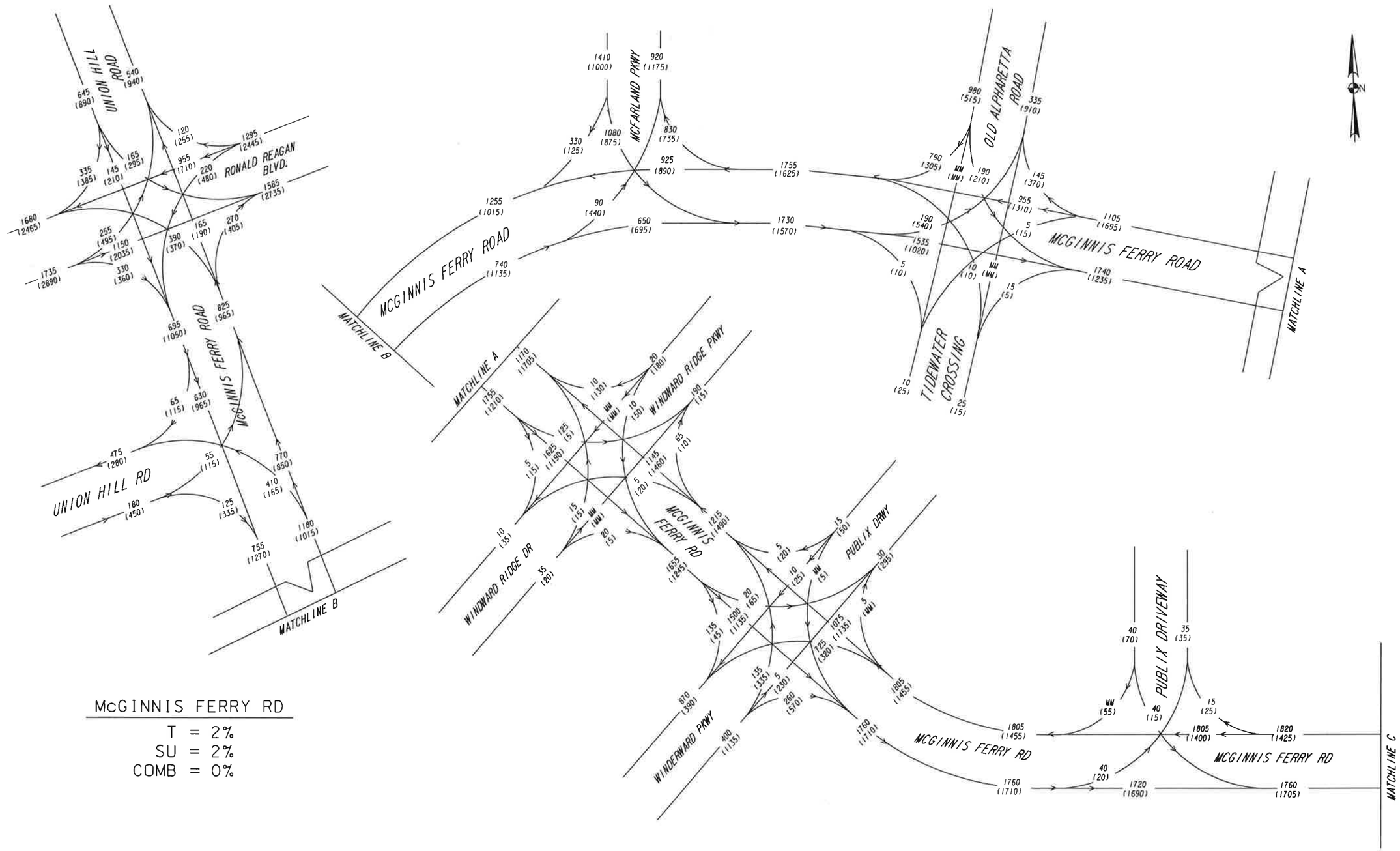

McGINNIS FERRY RD

T = 2%
SU = 2%
COMB = 0%

2040 AM DHV = 000
2040 PM DHV = (000)

Moreland Altobelli Associates, Inc.
2450 Commerce Avenue, Suite 100
Duluth, Ga. 30096-8910
Telephone (770) 263-5945

REVISION DATES

TRAFFIC DIAGRAMS
MCGINNIS FERRY RD

CHECKED: DATE:
BACKCHECKED: DATE:
CORRECTED: DATE:
VERIFIED: DATE:

DRAWING No.
10-0003

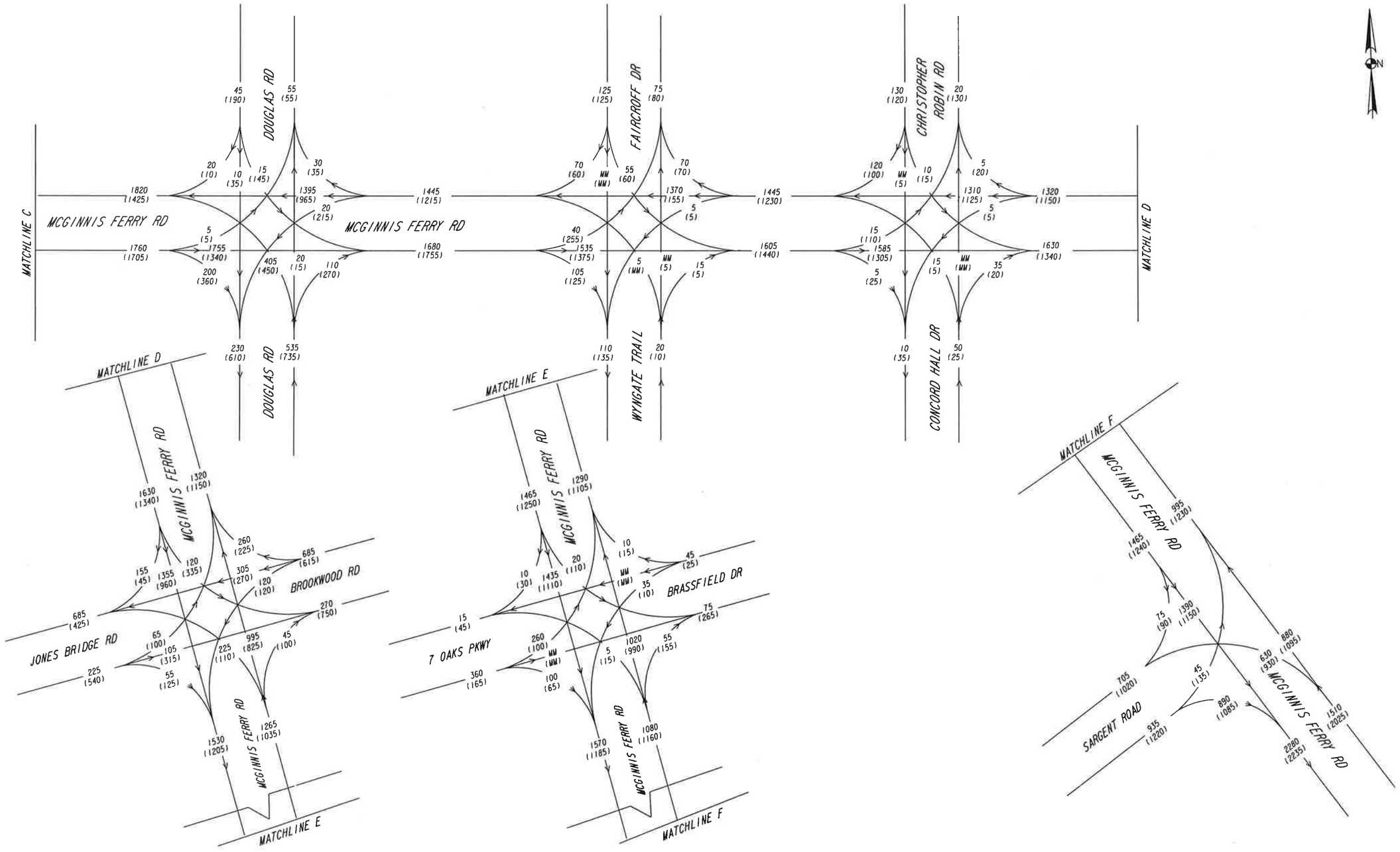

2040 AM DHV = 000
2040 PM DHV = (000)

Moreland Altobelli Associates, Inc.
2450 Commerce Avenue, Suite 100
Duluth, Ga. 30096-8910
Telephone (770) 263-5945

REVISION DATES

TRAFFIC DIAGRAMS
MCGINNIS FERRY RD

CHECKED: DATE:
BACKCHECKED: DATE:
CORRECTED: DATE:
VERIFIED: DATE:

DRAWING No. 10-0004